Switch mode Pulse Width Modulation Control Circuit

TL494, NCV494

The TL494 is a fixed frequency, pulse width modulation control circuit designed primarily for switch mode power supply control.

Features

- Complete Pulse Width Modulation Control Circuitry
- On−Chip Oscillator with Master or Slave Operation
- On−Chip Error Amplifiers
- On−Chip 5.0 V Reference
- Adjustable Deadtime Control
- Uncommitted Output Transistors Rated to 500 mA Source or Sink
- Output Control for Push−Pull or Single−Ended Operation
- Undervoltage Lockout
- NCV Prefix for Automotive and Other Applications Requiring Site and Control Changes
- Pb−Free Packages are Available*

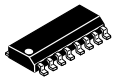

SOIC−16
CASE 751B

MARKING DIAGRAMS

x	= B or C
A	= Assembly Location
WL	= Wafer Lot
Y	= Year
WW	= Work Week
G	= Pb−Free Package

*This marking diagram also applies to NCV494.

PIN CONNECTIONS

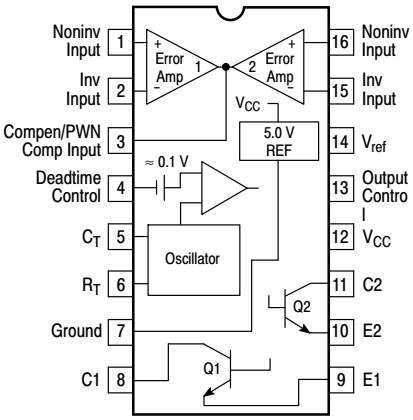

(Top View)

MAXIMUM RATINGS (Full operating ambient temperature range applies, unless otherwise noted.)

Rating	Symbol	Value	Unit
Power Supply Voltage	V_{CC}	42	V
Collector Output Voltage	V_{C1}, V_{C2}	42	V
Collector Output Current (Each transistor) (Note 1)	I_{C1}, I_{C2}	500	mA
Amplifier Input Voltage Range	V_{IR}	−0.3 to +42	V
Power Dissipation @ $T_A \leq 45°C$	P_D	1000	mW
Thermal Resistance, Junction−to−Ambient	$R_{\theta JA}$	80	°C/W
Operating Junction Temperature	T_J	125	°C
Storage Temperature Range	T_{stg}	−55 to +125	°C
Operating Ambient Temperature Range TL494B TL494C TL494I NCV494B	T_A	 −40 to +125 0 to +70 −40 to +85 −40 to +125	°C
Derating Ambient Temperature	T_A	45	°C

Stresses exceeding those listed in the Maximum Ratings table may damage the device. If any of these limits are exceeded, device functionality should not be assumed, damage may occur and reliability may be affected.

1. Maximum thermal limits must be observed.

*For additional information on our Pb−Free strategy and soldering details, please download the **onsemi** Soldering and Mounting Techniques Reference Manual, SOLDERRM/D.

ORDERING INFORMATION

See detailed ordering and shipping information in the package dimensions section on page 4 of this data sheet.

© Semiconductor Components Industries, LLC, 2005

RECOMMENDED OPERATING CONDITIONS

Characteristics	Symbol	Min	Typ	Max	Unit
Power Supply Voltage	V_{CC}	7.0	15	40	V
Collector Output Voltage	V_{C1}, V_{C2}	–	30	40	V
Collector Output Current (Each transistor)	I_{C1}, I_{C2}	–	–	200	mA
Amplified Input Voltage	V_{in}	–0.3	–	V_{CC} – 2.0	V
Current Into Feedback Terminal	I_{fb}	–	–	0.3	mA
Reference Output Current	I_{ref}	–	–	10	mA
Timing Resistor	R_T	1.8	30	500	kΩ
Timing Capacitor	C_T	0.0047	0.001	10	μF
Oscillator Frequency	f_{osc}	1.0	40	200	kHz

ELECTRICAL CHARACTERISTICS (V_{CC} = 15 V, C_T = 0.01 μF, R_T = 12 kΩ, unless otherwise noted.)
For typical values T_A = 25°C, for min/max values T_A is the operating ambient temperature range that applies, unless otherwise noted.

Characteristics	Symbol	Min	Typ	Max	Unit
REFERENCE SECTION					
Reference Voltage (I_O = 1.0 mA)	V_{ref}	4.75	5.0	5.25	V
Line Regulation (V_{CC} = 7.0 V to 40 V)	Reg_{line}	–	2.0	25	mV
Load Regulation (I_O = 1.0 mA to 10 mA)	Reg_{load}	–	3.0	15	mV
Short Circuit Output Current (V_{ref} = 0 V)	I_{SC}	15	35	75	mA
OUTPUT SECTION					
Collector Off–State Current (V_{CC} = 40 V, V_{CE} = 40 V)	$I_{C(off)}$	–	2.0	100	μA
Emitter Off–State Current V_{CC} = 40 V, V_C = 40 V, V_E = 0 V)	$I_{E(off)}$	–	–	–100	μA
Collector–Emitter Saturation Voltage (Note 2) Common–Emitter (V_E = 0 V, I_C = 200 mA) Emitter–Follower (V_C = 15 V, I_E = –200 mA)	 $V_{sat(C)}$ $V_{sat(E)}$	 – –	 1.1 1.5	 1.3 2.5	V
Output Control Pin Current Low State ($V_{OC} \leq$ 0.4 V) High State (V_{OC} = V_{ref})	 I_{OCL} I_{OCH}	 – –	 10 0.2	 – 3.5	 μA mA
Output Voltage Rise Time Common–Emitter (See Figure 12) Emitter–Follower (See Figure 13)	t_r	 – –	 100 100	 200 200	ns
Output Voltage Fall Time Common–Emitter (See Figure 12) Emitter–Follower (See Figure 13)	t_f	 – –	 25 40	 100 100	ns

2. Low duty cycle pulse techniques are used during test to maintain junction temperature as close to ambient temperature as possible.

ELECTRICAL CHARACTERISTICS (V_{CC} = 15 V, C_T = 0.01 μF, R_T = 12 kΩ, unless otherwise noted.)
For typical values T_A = 25°C, for min/max values T_A is the operating ambient temperature range that applies, unless otherwise noted.

Characteristics	Symbol	Min	Typ	Max	Unit
ERROR AMPLIFIER SECTION					
Input Offset Voltage ($V_{O\ (Pin\ 3)}$ = 2.5 V)	V_{IO}	–	2.0	10	mV
Input Offset Current ($V_{O\ (Pin\ 3)}$ = 2.5 V)	I_{IO}	–	5.0	250	nA
Input Bias Current ($V_{O\ (Pin\ 3)}$ = 2.5 V)	I_{IB}	–	−0.1	−1.0	μA
Input Common Mode Voltage Range (V_{CC} = 40 V, T_A = 25°C)	V_{ICR}	−0.3 to V_{CC}−2.0			V
Open Loop Voltage Gain (ΔV_O = 3.0 V, V_O = 0.5 V to 3.5 V, R_L = 2.0 kΩ)	A_{VOL}	70	95	–	dB
Unity−Gain Crossover Frequency (V_O = 0.5 V to 3.5 V, R_L = 2.0 kΩ)	f_{C-}	–	350	–	kHz
Phase Margin at Unity−Gain (V_O = 0.5 V to 3.5 V, R_L = 2.0 kΩ)	ϕ_m	–	65	–	deg.
Common Mode Rejection Ratio (V_{CC} = 40 V)	CMRR	65	90	–	dB
Power Supply Rejection Ratio (ΔV_{CC} = 33 V, V_O = 2.5 V, R_L = 2.0 kΩ)	PSRR	–	100	–	dB
Output Sink Current ($V_{O\ (Pin\ 3)}$ = 0.7 V)	I_{O-}	0.3	0.7	–	mA
Output Source Current ($V_{O\ (Pin\ 3)}$ = 3.5 V)	I_{O+}	2.0	−4.0	–	mA
PWM COMPARATOR SECTION (Test Circuit Figure 11)					
Input Threshold Voltage (Zero Duty Cycle)	V_{TH}	–	2.5	4.5	V
Input Sink Current ($V_{(Pin\ 3)}$ = 0.7 V)	I_{I-}	0.3	0.7	–	mA
DEADTIME CONTROL SECTION (Test Circuit Figure 11)					
Input Bias Current (Pin 4) ($V_{Pin\ 4}$ = 0 V to 5.25 V)	$I_{IB\ (DT)}$	–	−2.0	−10	μA
Maximum Duty Cycle, Each Output, Push−Pull Mode ($V_{Pin\ 4}$ = 0 V, C_T = 0.01 μF, R_T = 12 kΩ) ($V_{Pin\ 4}$ = 0 V, C_T = 0.001 μF, R_T = 30 kΩ)	DC_{max}	 45 –	 48 45	 50 50	%
Input Threshold Voltage (Pin 4) (Zero Duty Cycle) (Maximum Duty Cycle)	V_{th}	 – 0	 2.8 –	 3.3 –	V
OSCILLATOR SECTION					
Frequency (C_T = 0.001 μF, R_T = 30 kΩ)	f_{osc}	–	40	–	kHz
Standard Deviation of Frequency* (C_T = 0.001 μF, R_T = 30 kΩ)	σf_{osc}	–	3.0	–	%
Frequency Change with Voltage (V_{CC} = 7.0 V to 40 V, T_A = 25°C)	Δf_{osc} (ΔV)	–	0.1	–	%
Frequency Change with Temperature ($\Delta T_A = T_{low}$ to T_{high}) (C_T = 0.01 μF, R_T = 12 kΩ)	Δf_{osc} (ΔT)	–	–	12	%
UNDERVOLTAGE LOCKOUT SECTION					
Turn−On Threshold (V_{CC} increasing, I_{ref} = 1.0 mA)	V_{th}	5.5	6.43	7.0	V
TOTAL DEVICE					
Standby Supply Current (Pin 6 at V_{ref}, All other inputs and outputs open) (V_{CC} = 15 V) (V_{CC} = 40 V)	I_{CC}	 – –	 5.5 7.0	 10 15	mA
Average Supply Current (C_T = 0.01 μF, R_T = 12 kΩ, $V_{(Pin\ 4)}$ = 2.0 V) (V_{CC} = 15 V) (See Figure 12)		–	7.0	–	mA

* Standard deviation is a measure of the statistical distribution about the mean as derived from the formula, $\sigma \sqrt{\frac{\sum_{n=1}^{N} (X_n - \bar{X})^2}{N - 1}}$

ORDERING INFORMATION

Device	Package	Shipping†
TL494BDR2G	SOIC−16 (Pb−Free)	2500 Tape & Reel
TL494CDR2G	SOIC−16 (Pb−Free)	2500 Tape & Reel
NCV494BDR2G*	SOIC−16 (Pb−Free)	2500 Tape & Reel

†For information on tape and reel specifications, including part orientation and tape sizes, please refer to our Tape and Reel Packaging Specifications Brochure, BRD8011/D.

*NCV494: T_{low} = −40°C, T_{high} = +125°C. Guaranteed by design. NCV prefix is for automotive and other applications requiring site and change control.

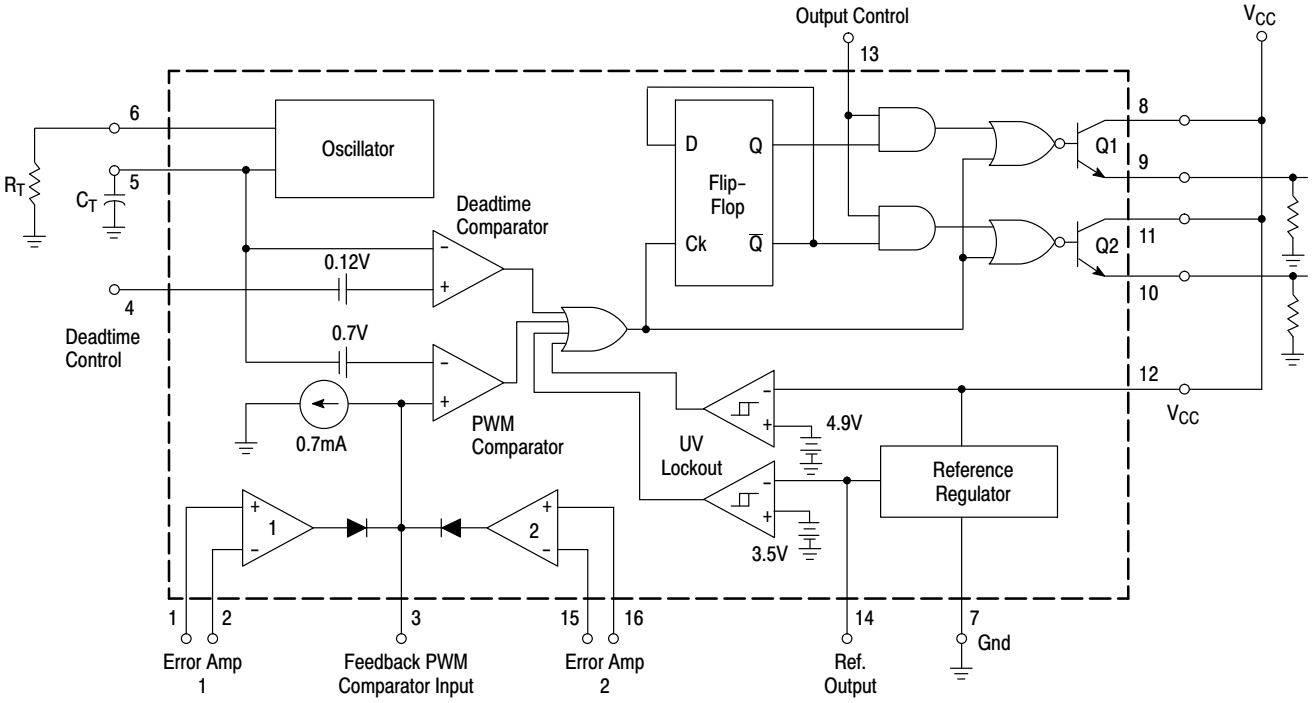

This device contains 46 active transistors.

Figure 1. Representative Block Diagram

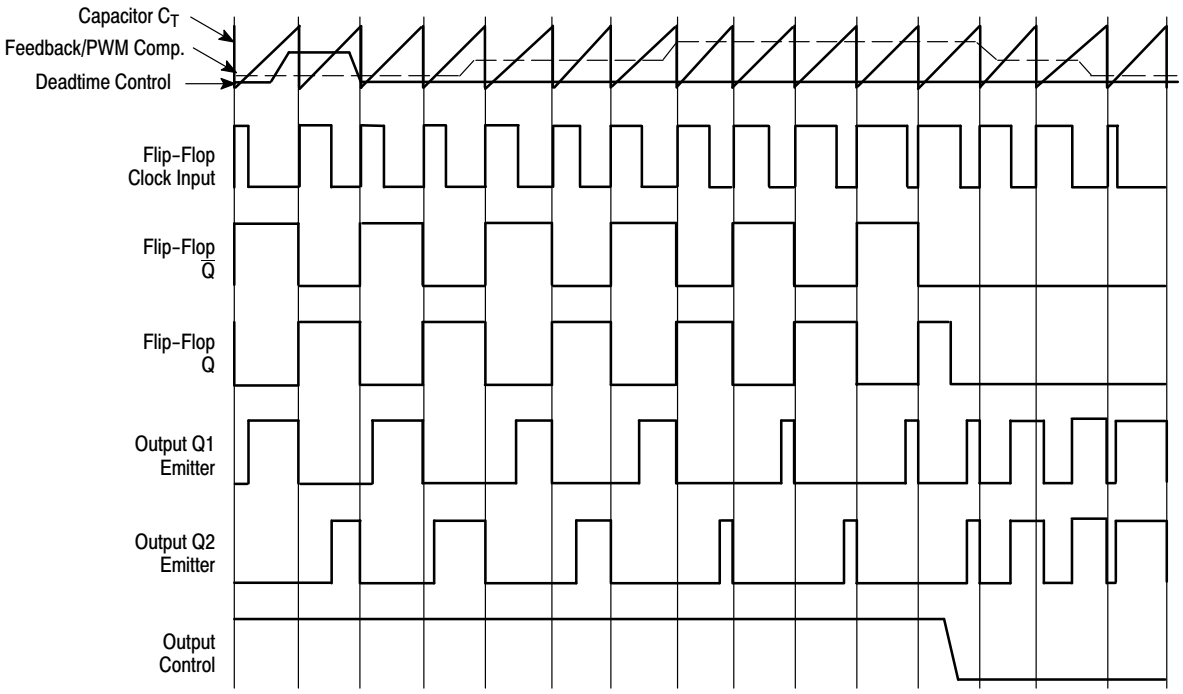

Figure 2. Timing Diagram

APPLICATIONS INFORMATION

Description

The TL494 is a fixed−frequency pulse width modulation control circuit, incorporating the primary building blocks required for the control of a switching power supply. (See Figure 1.) An internal−linear sawtooth oscillator is frequency− programmable by two external components, R_T and C_T. The approximate oscillator frequency is determined by:

$$f_{osc} \approx \frac{1.1}{R_T \bullet C_T}$$

For more information refer to Figure 3.

Output pulse width modulation is accomplished by comparison of the positive sawtooth waveform across capacitor C_T to either of two control signals. The NOR gates, which drive output transistors Q1 and Q2, are enabled only when the flip−flop clock−input line is in its low state. This happens only during that portion of time when the sawtooth voltage is greater than the control signals. Therefore, an increase in control−signal amplitude causes a corresponding linear decrease of output pulse width. (Refer to the Timing Diagram shown in Figure 2.)

The control signals are external inputs that can be fed into the deadtime control, the error amplifier inputs, or the feedback input. The deadtime control comparator has an effective 120 mV input offset which limits the minimum output deadtime to approximately the first 4% of the sawtooth−cycle time. This would result in a maximum duty cycle on a given output of 96% with the output control grounded, and 48% with it connected to the reference line. Additional deadtime may be imposed on the output by setting the deadtime−control input to a fixed voltage, ranging between 0 V to 3.3 V.

Functional Table

Input/Output Controls	Output Function	$\frac{f_{out}}{f_{osc}}$ =
Grounded	Single−ended PWM @ Q1 and Q2	1.0
@ V_{ref}	Push−pull Operation	0.5

The pulse width modulator comparator provides a means for the error amplifiers to adjust the output pulse width from the maximum percent on−time, established by the deadtime control input, down to zero, as the voltage at the feedback pin varies from 0.5 V to 3.5 V. Both error amplifiers have a common mode input range from −0.3 V to (V_{CC} − 2V), and may be used to sense power−supply output voltage and current. The error−amplifier outputs are active high and are ORed together at the noninverting input of the pulse−width modulator comparator. With this configuration, the amplifier that demands minimum output on time, dominates control of the loop.

When capacitor C_T is discharged, a positive pulse is generated on the output of the deadtime comparator, which clocks the pulse−steering flip−flop and inhibits the output transistors, Q1 and Q2. With the output−control connected to the reference line, the pulse−steering flip−flop directs the modulated pulses to each of the two output transistors alternately for push−pull operation. The output frequency is equal to half that of the oscillator. Output drive can also be taken from Q1 or Q2, when single−ended operation with a maximum on−time of less than 50% is required. This is desirable when the output transformer has a ringback winding with a catch diode used for snubbing. When higher output−drive currents are required for single−ended operation, Q1 and Q2 may be connected in parallel, and the output−mode pin must be tied to ground to disable the flip−flop. The output frequency will now be equal to that of the oscillator.

The TL494 has an internal 5.0 V reference capable of sourcing up to 10 mA of load current for external bias circuits. The reference has an internal accuracy of ±5.0% with a typical thermal drift of less than 50 mV over an operating temperature range of 0° to 70°C.

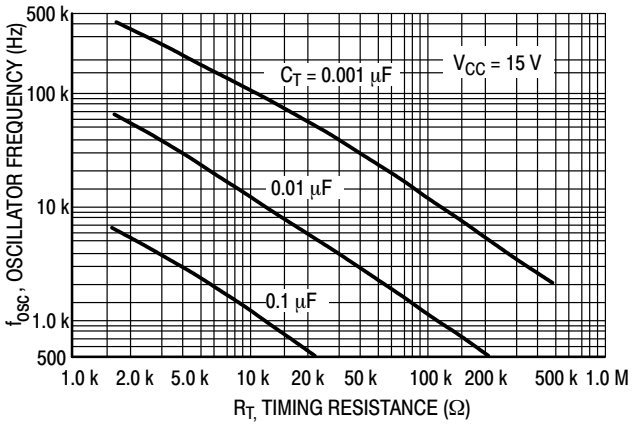

Figure 3. Oscillator Frequency versus Timing Resistance

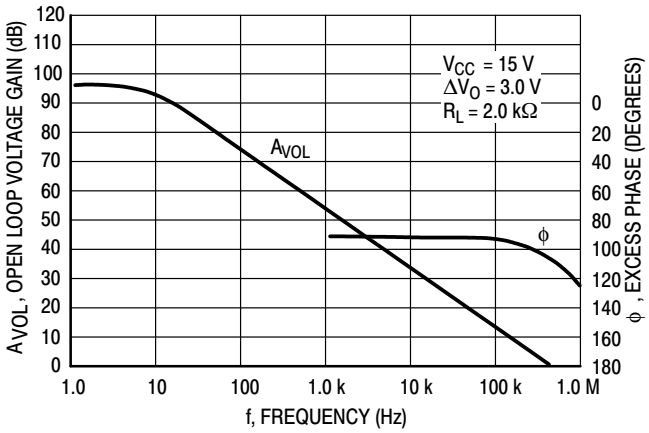

Figure 4. Open Loop Voltage Gain and Phase versus Frequency

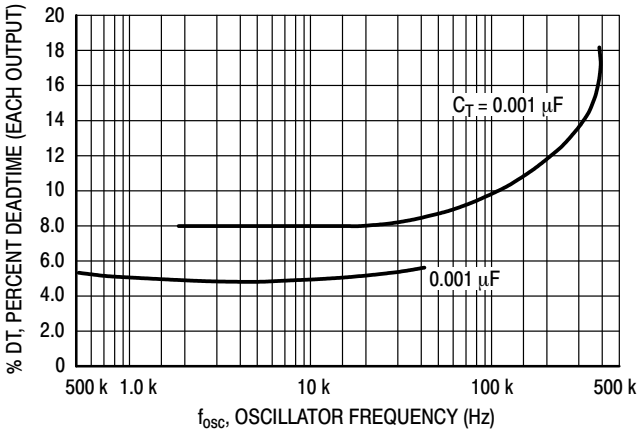

Figure 5. Percent Deadtime versus Oscillator Frequency

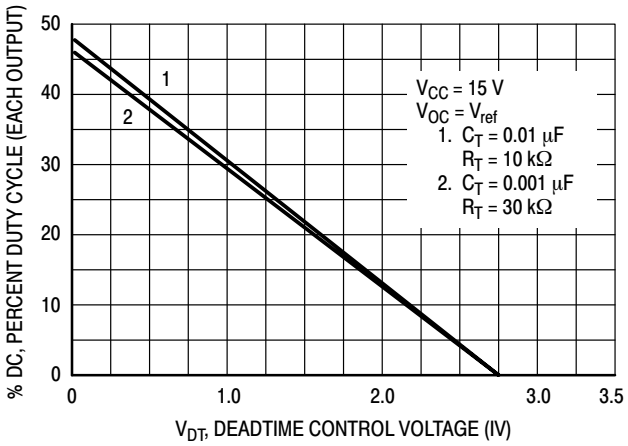

Figure 6. Percent Duty Cycle versus Deadtime Control Voltage

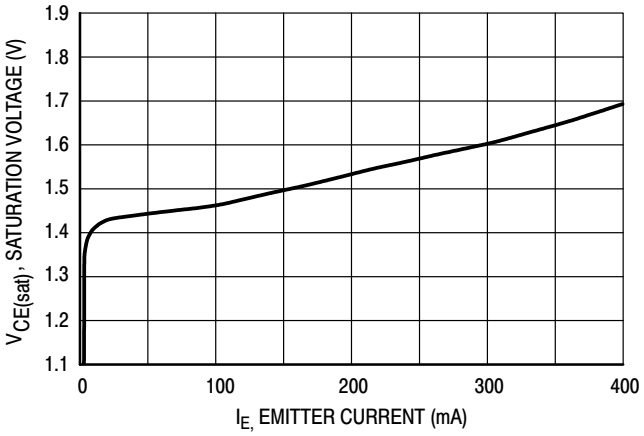

Figure 7. Emitter−Follower Configuration Output Saturation Voltage versus Emitter Current

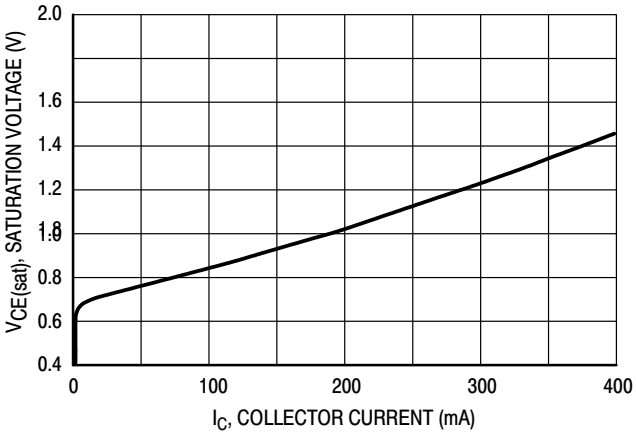

Figure 8. Common−Emitter Configuration Output Saturation Voltage versus Collector Current

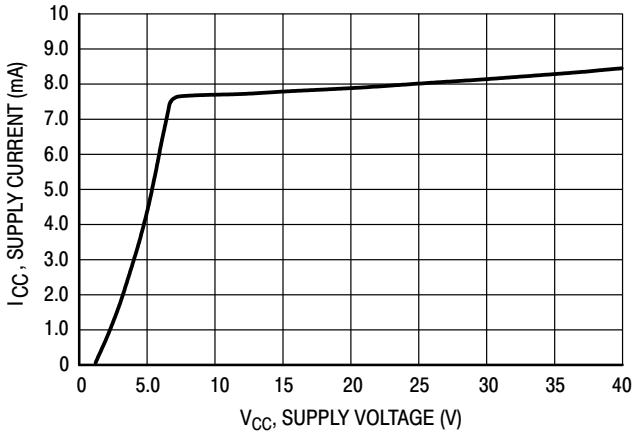

Figure 9. Standby Supply Current versus Supply Voltage

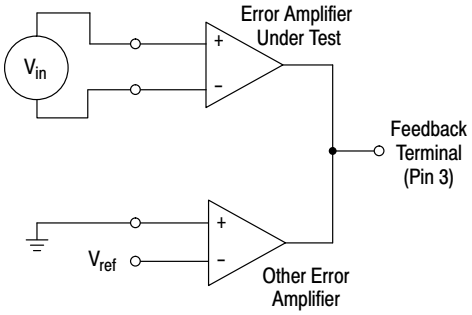

Figure 10. Error−Amplifier Characteristics

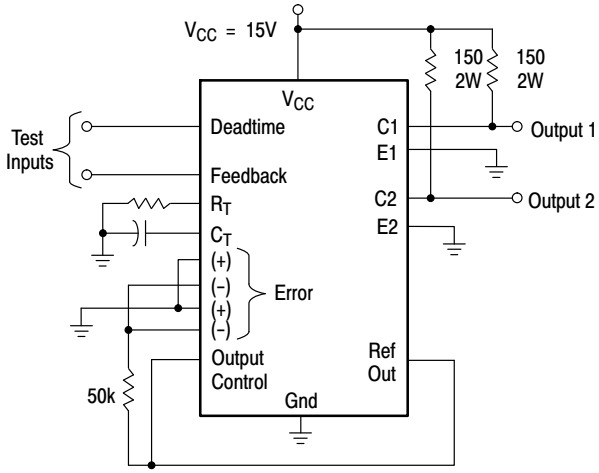

Figure 11. Deadtime and Feedback Control Circuit

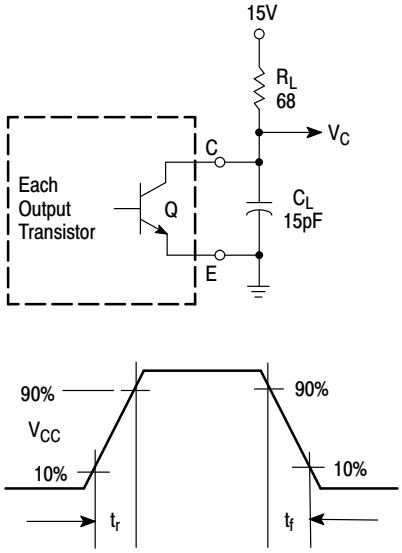

Figure 12. Common−Emitter Configuration Test Circuit and Waveform

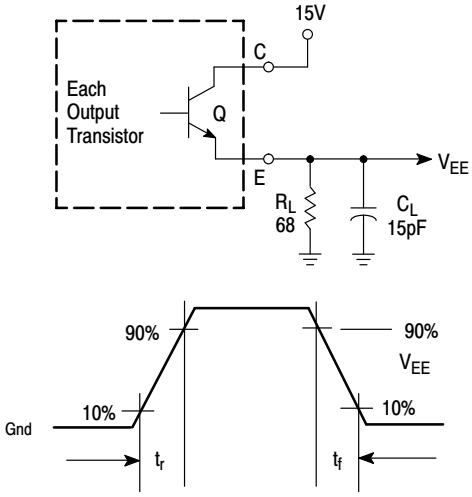

Figure 13. Emitter−Follower Configuration Test Circuit and Waveform

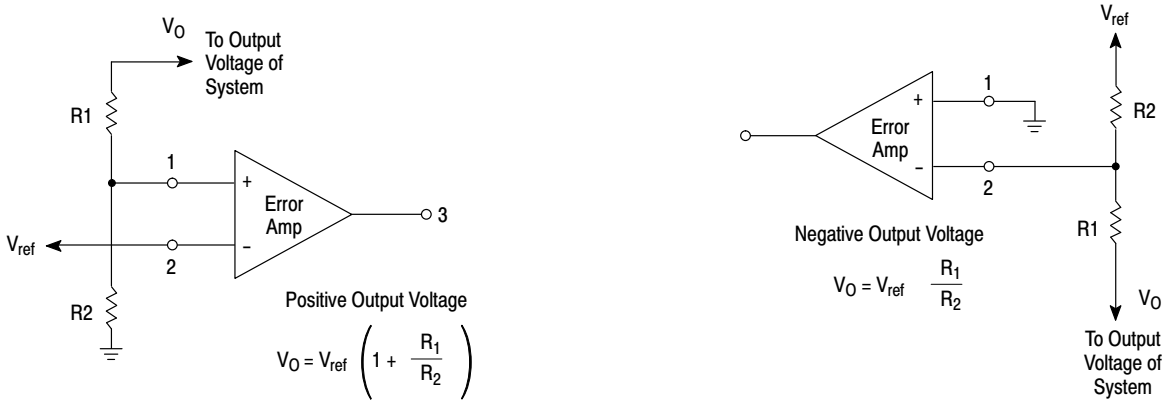

Figure 14. Error−Amplifier Sensing Techniques

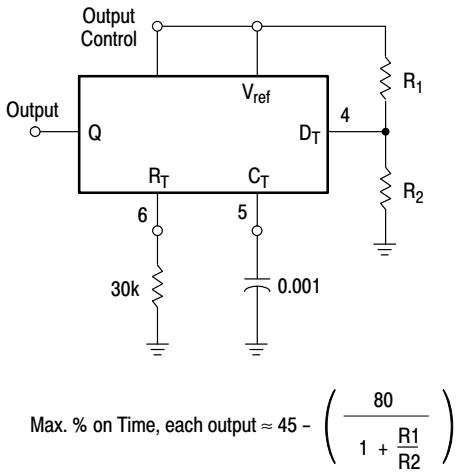

Figure 15. Deadtime Control Circuit

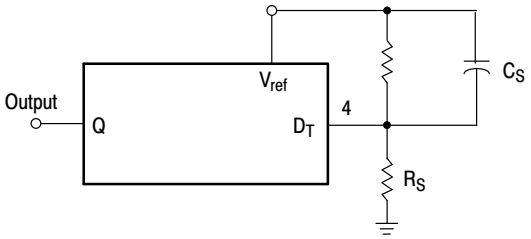

Figure 16. Soft−Start Circuit

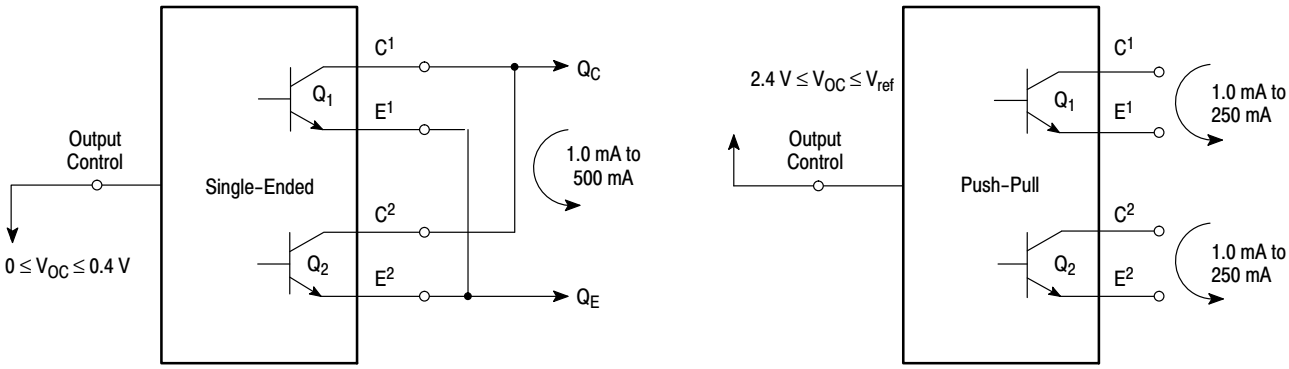

Figure 17. Output Connections for Single−Ended and Push−Pull Configurations

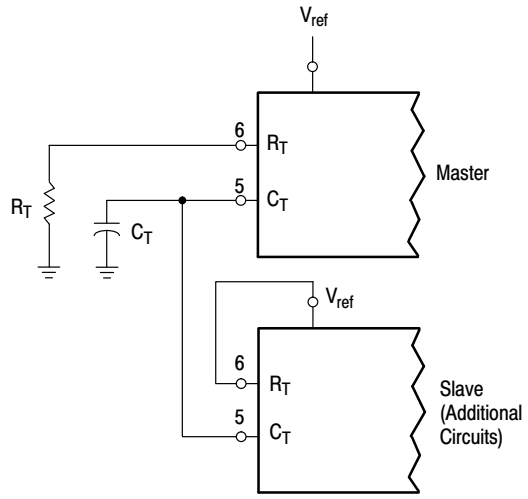

Figure 18. Slaving Two or More Control Circuits

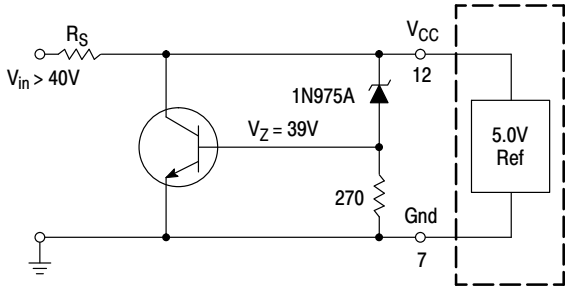

Figure 19. Operation with V_{in} > 40 V Using External Zener

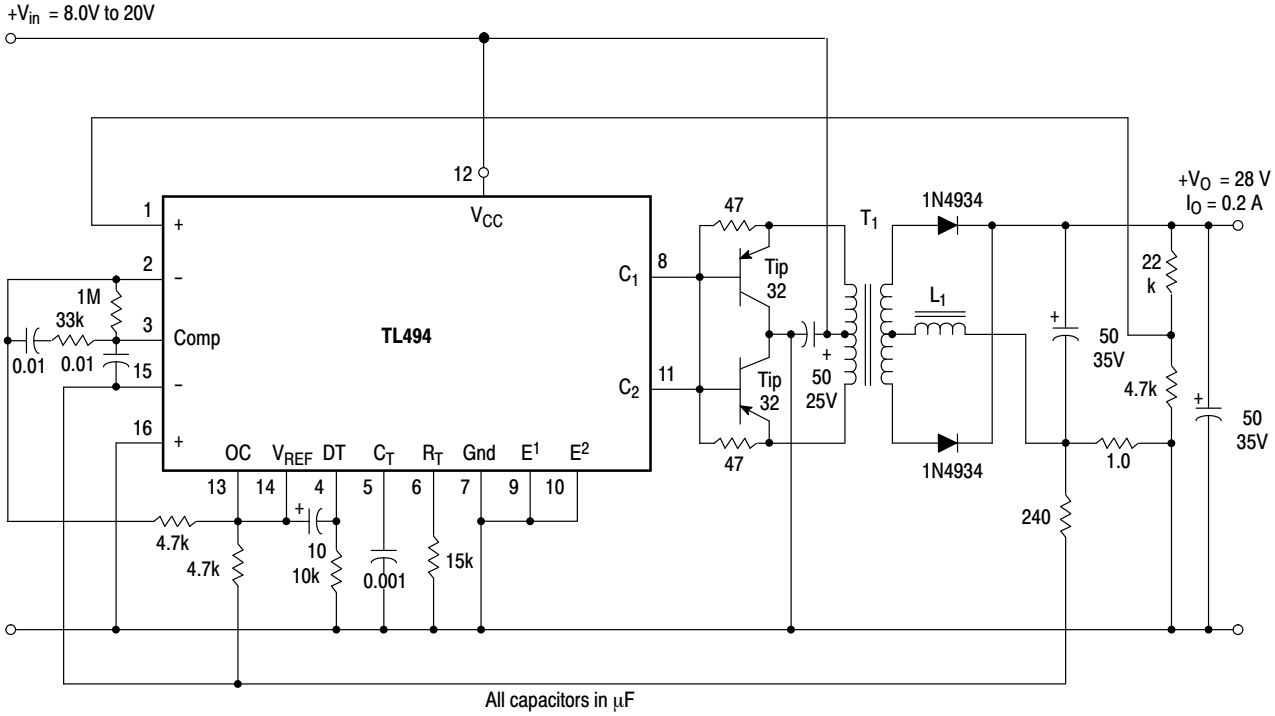

Figure 20. Pulse Width Modulated Push−Pull Converter

Test	Conditions	Results
Line Regulation	V_{in} = 10 V to 40 V	14 mV 0.28%
Load Regulation	V_{in} = 28 V, I_O = 1.0 mA to 1.0 A	3.0 mV 0.06%
Output Ripple	V_{in} = 28 V, I_O = 1.0 A	65 mV pp P.A.R.D.
Short Circuit Current	V_{in} = 28 V, R_L = 0.1 Ω	1.6 A
Efficiency	V_{in} = 28 V, I_O = 1.0 A	71%

L1 − 3.5 mH @ 0.3 A
T1 − Primary: 20T C.T. #28 AWG
Secondary: 12OT C.T. #36 AWG
Core: Ferroxcube 1408P−L00−3CB

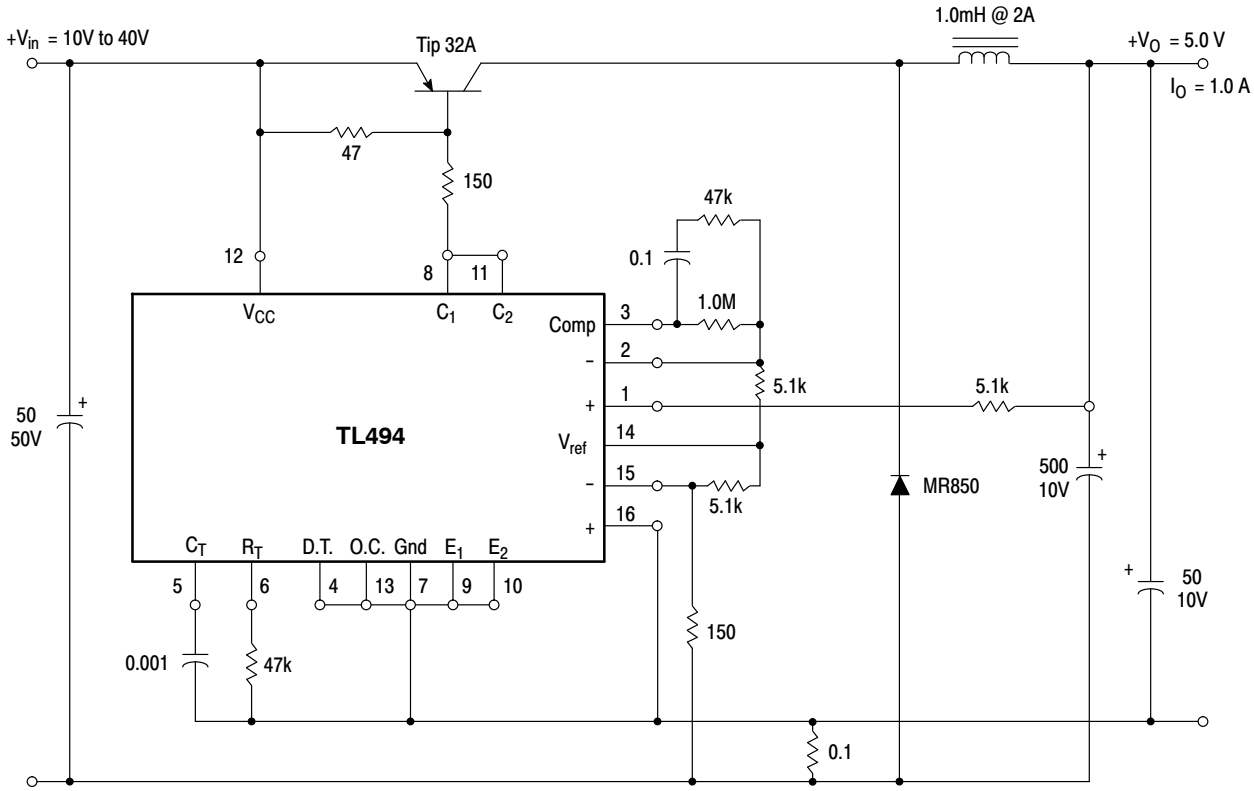

Figure 21. Pulse Width Modulated Step−Down Converter

Test	Conditions	Results
Line Regulation	V_{in} = 8.0 V to 40 V	3.0 mV 0.01%
Load Regulation	V_{in} = 12.6 V, I_O = 0.2 mA to 200 mA	5.0 mV 0.02%
Output Ripple	V_{in} = 12.6 V, I_O = 200 mA	40 mV pp P.A.R.D.
Short Circuit Current	V_{in} = 12.6 V, R_L = 0.1 Ω	250 mA
Efficiency	V_{in} = 12.6 V, I_O = 200 mA	72%

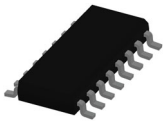

SOIC−16 9.90x3.90x1.37 1.27P
CASE 751B
ISSUE M

DATE 18 OCT 2024

NOTES:
1. DIMENSIONING AND TOLERANCING PER ASME Y14.5M, 2018.
2. DIMENSION IN MILLIMETERS. ANGLE IN DEGREES.
3. DIMENSIONS D AND E1 DO NOT INCLUDE MOLD PROTRUSION.
4. MAXIMUM MOLD PROTRUSION 0.15mm PER SIDE.
5. DIMENSION b DOES NOT INCLUDE DAMBAR PROTRUSION. ALLOWABLE DAMBAR PROTRUSION SHALL BE 0.127mm TOTAL IN EXCESS OF THE b DIMENSION AT MAXIMUM MATERIAL CONDITION.

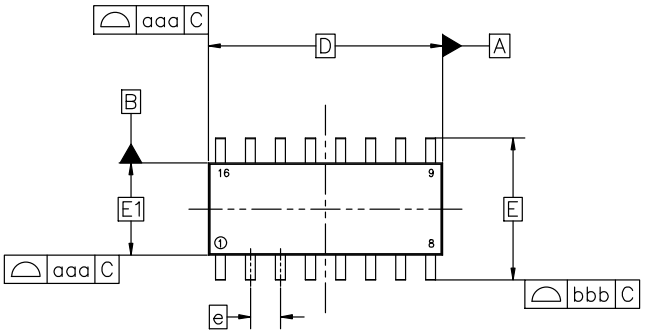

TOP VIEW

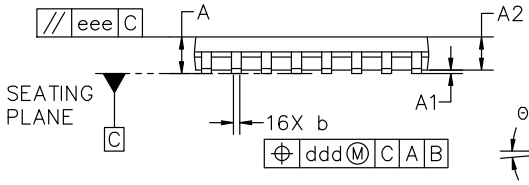

SIDE VIEW

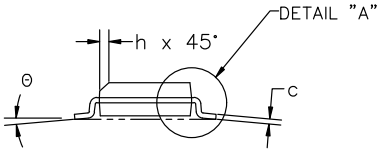

END VIEW

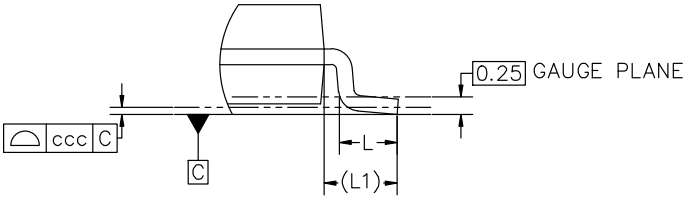

DETAIL "A"
Scale 3:1

MILLIMETERS			
DIM	MIN	NOM	MAX
A	1.35	1.55	1.75
A1	0.10	0.18	0.25
A2	1.25	1.37	1.50
b	0.35	0.42	0.49
c	0.19	0.22	0.25
D	9.90 BSC		
E	6.00 BSC		
E1	3.90 BSC		
e	1.27 BSC		
h	0.25	---	0.50
L	0.40	0.83	1.25
L1	1.05 REF		
Θ	0°	---	7°
TOLERANCE OF FORM AND POSITION			
aaa	0.10		
bbb	0.20		
ccc	0.10		
ddd	0.25		
eee	0.10		

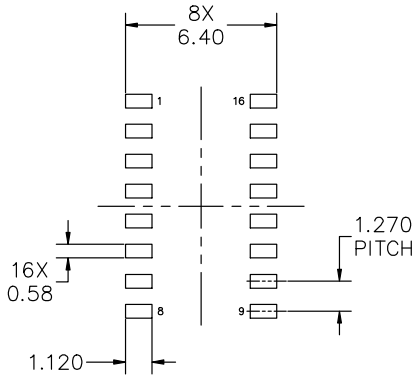

RECOMMENDED MOUNTING FOOTPRINT

*FOR ADDITIONAL INFORMATION ON OUR PB−FREE STRATEGY AND SOLDERING DETAILS, PLEASE DOWNLOAD THE onsemi SOLDERING AND MOUNTING TECHNIQUES REFERENCE MANUAL, SOLDERRM/D

DOCUMENT NUMBER:	98ASB42566B	Electronic versions are uncontrolled except when accessed directly from the Document Repository. Printed versions are uncontrolled except when stamped "CONTROLLED COPY" in red.
DESCRIPTION:	SOIC−16 9.90X3.90X1.37 1.27P	PAGE 1 OF 2

onsemi and onsemi are trademarks of Semiconductor Components Industries, LLC dba **onsemi** or its subsidiaries in the United States and/or other countries. **onsemi** reserves the right to make changes without further notice to any products herein. **onsemi** makes no warranty, representation or guarantee regarding the suitability of its products for any particular purpose, nor does **onsemi** assume any liability arising out of the application or use of any product or circuit, and specifically disclaims any and all liability, including without limitation special, consequential or incidental damages. **onsemi** does not convey any license under its patent rights nor the rights of others.

SOIC−16 9.90x3.90x1.37 1.27P
CASE 751B
ISSUE M

DATE 18 OCT 2024

GENERIC MARKING DIAGRAM*

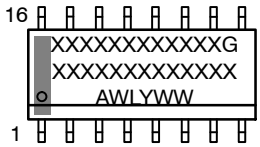

XXXXX = Specific Device Code
A = Assembly Location
WL = Wafer Lot
Y = Year
WW = Work Week
G = Pb−Free Package

*This information is generic. Please refer to device data sheet for actual part marking. Pb−Free indicator, “G” or microdot “▪”, may or may not be present. Some products may not follow the Generic Marking.

STYLE 1:

PIN 1.	COLLECTOR
2.	BASE
3.	EMITTER
4.	NO CONNECTION
5.	EMITTER
6.	BASE
7.	COLLECTOR
8.	COLLECTOR
9.	BASE
10.	EMITTER
11.	NO CONNECTION
12.	EMITTER
13.	BASE
14.	COLLECTOR
15.	EMITTER
16.	COLLECTOR

STYLE 2:

PIN 1.	CATHODE
2.	ANODE
3.	NO CONNECTION
4.	CATHODE
5.	CATHODE
6.	NO CONNECTION
7.	ANODE
8.	CATHODE
9.	CATHODE
10.	ANODE
11.	NO CONNECTION
12.	CATHODE
13.	CATHODE
14.	NO CONNECTION
15.	ANODE
16.	CATHODE

STYLE 3:

PIN 1.	COLLECTOR, DYE #1
2.	BASE, #1
3.	EMITTER, #1
4.	COLLECTOR, #1
5.	COLLECTOR, #2
6.	BASE, #2
7.	EMITTER, #2
8.	COLLECTOR, #2
9.	COLLECTOR, #3
10.	BASE, #3
11.	EMITTER, #3
12.	COLLECTOR, #3
13.	COLLECTOR, #4
14.	BASE, #4
15.	EMITTER, #4
16.	COLLECTOR, #4

STYLE 4:

PIN 1.	COLLECTOR, DYE #1
2.	COLLECTOR, #1
3.	COLLECTOR, #2
4.	COLLECTOR, #2
5.	COLLECTOR, #3
6.	COLLECTOR, #3
7.	COLLECTOR, #4
8.	COLLECTOR, #4
9.	BASE, #4
10.	EMITTER, #4
11.	BASE, #3
12.	EMITTER, #3
13.	BASE, #2
14.	EMITTER, #2
15.	BASE, #1
16.	EMITTER, #1

STYLE 5:

PIN 1.	DRAIN, DYE #1
2.	DRAIN, #1
3.	DRAIN, #2
4.	DRAIN, #2
5.	DRAIN, #3
6.	DRAIN, #3
7.	DRAIN, #4
8.	DRAIN, #4
9.	GATE, #4
10.	SOURCE, #4
11.	GATE, #3
12.	SOURCE, #3
13.	GATE, #2
14.	SOURCE, #2
15.	GATE, #1
16.	SOURCE, #1

STYLE 6:

PIN 1.	CATHODE
2.	CATHODE
3.	CATHODE
4.	CATHODE
5.	CATHODE
6.	CATHODE
7.	CATHODE
8.	CATHODE
9.	ANODE
10.	ANODE
11.	ANODE
12.	ANODE
13.	ANODE
14.	ANODE
15.	ANODE
16.	ANODE

STYLE 7:

PIN 1.	SOURCE N-CH
2.	COMMON DRAIN (OUTPUT)
3.	COMMON DRAIN (OUTPUT)
4.	GATE P-CH
5.	COMMON DRAIN (OUTPUT)
6.	COMMON DRAIN (OUTPUT)
7.	COMMON DRAIN (OUTPUT)
8.	SOURCE P-CH
9.	SOURCE P-CH
10.	COMMON DRAIN (OUTPUT)
11.	COMMON DRAIN (OUTPUT)
12.	COMMON DRAIN (OUTPUT)
13.	GATE N-CH
14.	COMMON DRAIN (OUTPUT)
15.	COMMON DRAIN (OUTPUT)
16.	SOURCE N-CH

onsemi and onsemi are trademarks of Semiconductor Components Industries, LLC dba **onsemi** or its subsidiaries in the United States and/or other countries. **onsemi** reserves the right to make changes without further notice to any products herein. **onsemi** makes no warranty, representation or guarantee regarding the suitability of its products for any particular purpose, nor does **onsemi** assume any liability arising out of the application or use of any product or circuit, and specifically disclaims any and all liability, including without limitation special, consequential or incidental damages. **onsemi** does not convey any license under its patent rights nor the rights of others.

© Semiconductor Components Industries, LLC, 2019

onsemi, onsemi, and other names, marks, and brands are registered and/or common law trademarks of Semiconductor Components Industries, LLC dba "**onsemi**" or its affiliates and/or subsidiaries in the United States and/or other countries. **onsemi** owns the rights to a number of patents, trademarks, copyrights, trade secrets, and other intellectual property. A listing of **onsemi**'s product/patent coverage may be accessed at www.onsemi.com/site/pdf/Patent−Marking.pdf. **onsemi** reserves the right to make changes at any time to any products or information herein, without notice. The information herein is provided "as−is" and **onsemi** makes no warranty, representation or guarantee regarding the accuracy of the information, product features, availability, functionality, or suitability of its products for any particular purpose, nor does **onsemi** assume any liability arising out of the application or use of any product or circuit, and specifically disclaims any and all liability, including without limitation special, consequential or incidental damages. Buyer is responsible for its products and applications using **onsemi** products, including compliance with all laws, regulations and safety requirements or standards, regardless of any support or applications information provided by **onsemi**. "Typical" parameters which may be provided in **onsemi** data sheets and/or specifications can and do vary in different applications and actual performance may vary over time. All operating parameters, including "Typicals" must be validated for each customer application by customer's technical experts. **onsemi** does not convey any license under any of its intellectual property rights nor the rights of others. **onsemi** products are not designed, intended, or authorized for use as a critical component in life support systems or any FDA Class 3 medical devices or medical devices with a same or similar classification in a foreign jurisdiction or any devices intended for implantation in the human body. Should Buyer purchase or use **onsemi** products for any such unintended or unauthorized application, Buyer shall indemnify and hold **onsemi** and its officers, employees, subsidiaries, affiliates, and distributors harmless against all claims, costs, damages, and expenses, and reasonable attorney fees arising out of, directly or indirectly, any claim of personal injury or death associated with such unintended or unauthorized use, even if such claim alleges that **onsemi** was negligent regarding the design or manufacture of the part. **onsemi** is an Equal Opportunity/Affirmative Action Employer. This literature is subject to all applicable copyright laws and is not for resale in any manner.

ADDITIONAL INFORMATION

TECHNICAL PUBLICATIONS:
Technical Library: www.onsemi.com/design/resources/technical−documentation
onsemi Website: www.onsemi.com

ONLINE SUPPORT: www.onsemi.com/support
For additional information, please contact your local Sales Representative at
www.onsemi.com/support/sales