Automotive Inductive Load Driver

NUD3124, SZNUD3124

This micro−integrated part provides a single component solution to switch inductive loads such as relays, solenoids, and small DC motors without the need of a free−wheeling diode. It accepts logic level inputs, thus allowing it to be driven by a large variety of devices including logic gates, inverters, and microcontrollers.

Features

- Provides Robust Interface between D.C. Relay Coils and Sensitive Logic
- Capable of Driving Relay Coils Rated up to 150 mA at 12 Volts
- Replaces 3 or 4 Discrete Components for Lower Cost
- Internal Zener Eliminates Need for Free−Wheeling Diode
- Meets Load Dump and other Automotive Specs
- SZ Prefix for Automotive and Other Applications Requiring Unique Site and Control Change Requirements; AEC−Q101 Qualified and PPAP Capable
- These Devices are Pb−Free, Halogen Free/BFR Free and are RoHS Compliant

Typical Applications

- Automotive and Industrial Environment
- Drives Window, Latch, Door, and Antenna Relays

Benefits

- Reduced PCB Space
- Standardized Driver for Wide Range of Relays
- Simplifies Circuit Design and PCB Layout
- Compliance with Automotive Specifications

SOT−23
CASE 318
STYLE 21

SC−74
CASE 318F
STYLE 7

MARKING DIAGRAMS

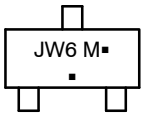

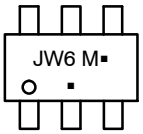

JW6 = Specific Device Code
M = Date Code
▪ = Pb−Free Package
(Note: Microdot may be in either location)

JW6 = Specific Device Code
M = Date Code
▪ = Pb−Free Package
(Note: Microdot may be in either location)

ORDERING INFORMATION

Device	Package	Shipping†
SZNUD3124LT1G	SOT−23 (Pb−Free)	3000 / Tape & Reel
SZNUD3124DMT1G	SC−74 (Pb−Free)	3000 / Tape & Reel

DISCONTINUED (Note 1)

NUD3124LT1G	SOT−23 (Pb−Free)	3000 / Tape & Reel
NUD3124DMT1G	SC−74 (Pb−Free)	3000 / Tape & Reel

†For information on tape and reel specifications, including part orientation and tape sizes, please refer to our Tape and Reel Packaging Specifications Brochure, BRD8011/D.

1. **DISCONTINUED:** These devices are not recommended for new design. Please contact your **onsemi** representative for information. The most current information on these devices may be available on www.onsemi.com.

INTERNAL CIRCUIT DIAGRAMS

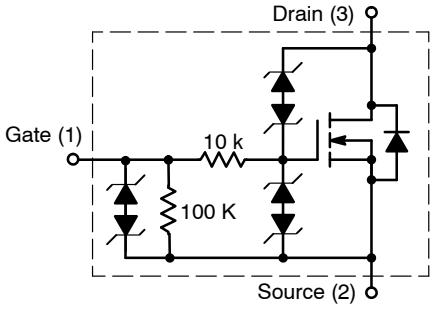

CASE 318

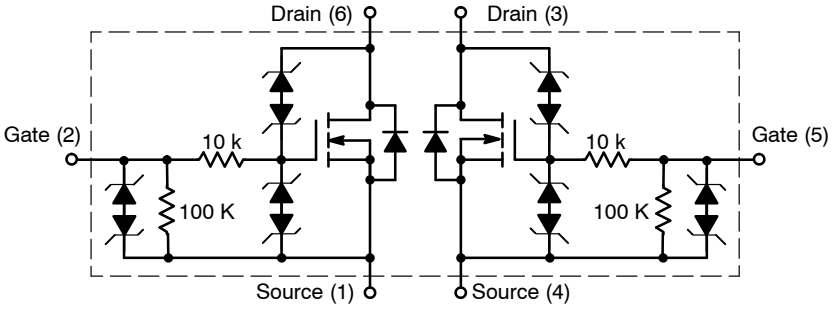

CASE 318F

MAXIMUM RATINGS (T_J = 25°C unless otherwise specified)

Symbol	Rating	Value	Unit
V_{DSS}	Drain−to−Source Voltage – Continuous (T_J = 125°C)	28	V
V_{GSS}	Gate−to−Source Voltage – Continuous (T_J = 125°C)	12	V
I_D	Drain Current – Continuous (T_J = 125°C)	150	mA
E_Z	Single Pulse Drain−to−Source Avalanche Energy (For Relay's Coils/Inductive Loads of 80 Ω or Higher) (T_J Initial = 85°C)	250	mJ
P_{PK}	Peak Power Dissipation, Drain−to−Source (Notes 2 and 3) (T_J Initial = 85°C)	20	W
E_{LD1}	Load Dump Suppressed Pulse, Drain−to−Source (Notes 4 and 5) (Suppressed Waveform: V_s = 45 V, R_{SOURCE} = 0.5 Ω, T = 200 ms) (For Relay's Coils/Inductive Loads of 80 Ω or Higher) (T_J Initial = 85°C)	80	V
E_{LD2}	Inductive Switching Transient 1, Drain−to−Source (Waveform: R_{SOURCE} = 10 Ω, T = 2.0 ms) (For Relay's Coils/Inductive Loads of 80 Ω or Higher) (T_J Initial = 85°C)	100	V
E_{LD3}	Inductive Switching Transient 2, Drain−to−Source (Waveform: R_{SOURCE} = 4.0 Ω, T = 50 μs) (For Relay's Coils/Inductive Loads of 80 Ω or Higher) (T_J Initial = 85°C)	300	V
Rev−Bat	Reverse Battery, 10 Minutes (Drain−to−Source) (For Relay's Coils/Inductive Loads of 80 Ω or more)	−14	V
Dual−Volt	Dual Voltage Jump Start, 10 Minutes (Drain−to−Source)	28	V
ESD	Human Body Model (HBM) According to EIA/JESD22/A114 Specification	2,000	V

Stresses exceeding those listed in the Maximum Ratings table may damage the device. If any of these limits are exceeded, device functionality should not be assumed, damage may occur and reliability may be affected.

2. Nonrepetitive current square pulse 1.0 ms duration.
3. For different square pulse durations, see Figure 2.
4. Nonrepetitive load dump suppressed pulse per Figure 3.
5. For relay's coils/inductive loads higher than 80 Ω, see Figure 4.

THERMAL CHARACTERISTICS

Symbol	Rating		Value	Unit
T_A	Operating Ambient Temperature		−40 to 125	°C
T_J	Maximum Junction Temperature		150	°C
T_{STG}	Storage Temperature Range		−65 to 150	°C
P_D	Total Power Dissipation (Note 6) Derating above 25°C	SOT−23	225 1.8	mW mW/°C
P_D	Total Power Dissipation (Note 6) Derating above 25°C	SC−74	380 3.0	mW mW/°C
$R_{\theta JA}$	Thermal Resistance Junction−to−Ambient (Note 6)	SOT−23 SC−74	556 329	°C/W

6. Mounted onto minimum pad board.

Share Feedback
Your Opinion Matters

ELECTRICAL CHARACTERISTICS (T_J = 25°C unless otherwise specified)

Characteristic	Symbol	Min	Typ	Max	Unit
OFF CHARACTERISTICS					
Drain to Source Sustaining Voltage (I_D = 10 mA)	V_{BRDSS}	28	34	38	V
Drain to Source Leakage Current	I_{DSS}				μA
(V_{DS} = 12 V, V_{GS} = 0 V)		–	–	0.5	
(V_{DS} = 12 V, V_{GS} = 0 V, T_J = 125°C)		–	–	1.0	
(V_{DS} = 28 V, V_{GS} = 0 V)		–	–	50	
(V_{DS} = 28 V, V_{GS} = 0 V, T_J = 125°C)		–	–	80	
Gate Body Leakage Current	I_{GSS}				μA
(V_{GS} = 3.0 V, V_{DS} = 0 V)		–	–	60	
(V_{GS} = 3.0 V, V_{DS} = 0 V, T_J = 125°C)		–	–	80	
(V_{GS} = 5.0 V, V_{DS} = 0 V)		–	–	90	
(V_{GS} = 5.0 V, V_{DS} = 0 V, T_J = 125°C)		–	–	110	
ON CHARACTERISTICS					
Gate Threshold Voltage	$V_{GS(th)}$				V
(V_{GS} = V_{DS}, I_D = 1.0 mA)		1.3	1.8	2.0	
(V_{GS} = V_{DS}, I_D = 1.0 mA, T_J = 125°C)		1.3	–	2.0	
Drain to Source On−Resistance	$R_{DS(on)}$				Ω
(I_D = 150 mA, V_{GS} = 3.0 V)		–	–	1.4	
(I_D = 150 mA, V_{GS} = 3.0 V, T_J = 125°C)		–	–	1.7	
(I_D = 150 mA, V_{GS} = 5.0 V)		–	–	0.8	
(I_D = 150 mA, V_{GS} = 5.0 V, T_J = 125°C)		–	–	1.1	
Output Continuous Current	$I_{DS(on)}$				mA
(V_{DS} = 0.25 V, V_{GS} = 3.0 V)		150	200	–	
(V_{DS} = 0.25 V, V_{GS} = 3.0 V, T_J = 125°C)		140	–	–	
Forward Transconductance (V_{DS} = 12 V, I_D = 150 mA)	g_{FS}	–	500	–	mmho
DYNAMIC CHARACTERISTICS					
Input Capacitance (V_{DS} = 12 V, V_{GS} = 0 V, f = 10 kHz)	Ciss	–	32	–	pf
Output Capacitance (V_{DS} = 12 V, V_{GS} = 0 V, f = 10 kHz)	Coss	–	21	–	pf
Transfer Capacitance (V_{DS} = 12 V, V_{GS} = 0 V, f = 10 kHz)	Crss	–	8.0	–	pf
SWITCHING CHARACTERISTICS					
Propagation Delay Times:					ns
High to Low Propagation Delay; Figure 1, (V_{DS} = 12 V, V_{GS} = 3.0 V)	t_{PHL}	–	890	–	
Low to High Propagation Delay; Figure 1, (V_{DS} = 12 V, V_{GS} = 3.0 V)	t_{PLH}	–	912	–	
High to Low Propagation Delay; Figure 1, (V_{DS} = 12 V, V_{GS} = 5.0 V)	t_{PHL}	–	324	–	
Low to High Propagation Delay; Figure 1, (V_{DS} = 12 V, V_{GS} = 5.0 V)	t_{PLH}	–	1280	–	
Transition Times:					ns
Fall Time; Figure 1, (V_{DS} = 12 V, V_{GS} = 3.0 V)	t_f	–	2086	–	
Rise Time; Figure 1, (V_{DS} = 12 V, V_{GS} = 3.0 V)	t_r	–	708	–	
Fall Time; Figure 1, (V_{DS} = 12 V, V_{GS} = 5.0 V)	t_f	–	556	–	
Rise Time; Figure 1, (V_{DS} = 12 V, V_{GS} = 5.0 V)	t_r	–	725	–	

Product parametric performance is indicated in the Electrical Characteristics for the listed test conditions, unless otherwise noted. Product performance may not be indicated by the Electrical Characteristics if operated under different conditions.

Share Feedback
Your Opinion Matters

TYPICAL PERFORMANCE CURVES

(T_J = 25°C unless otherwise noted)

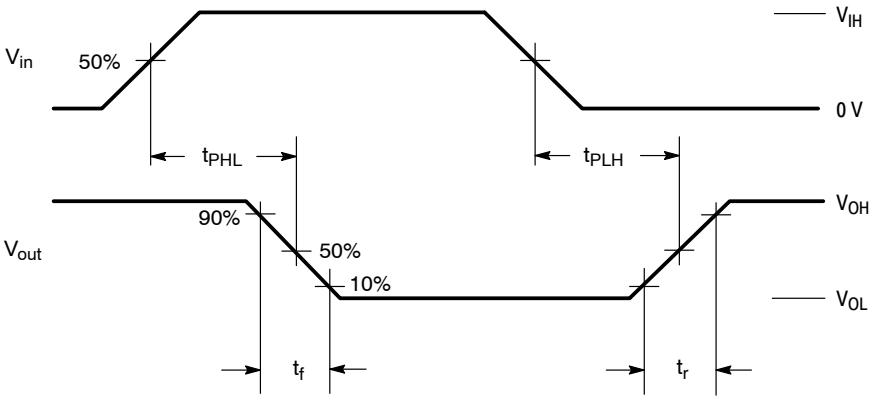

Figure 1. Switching Waveforms

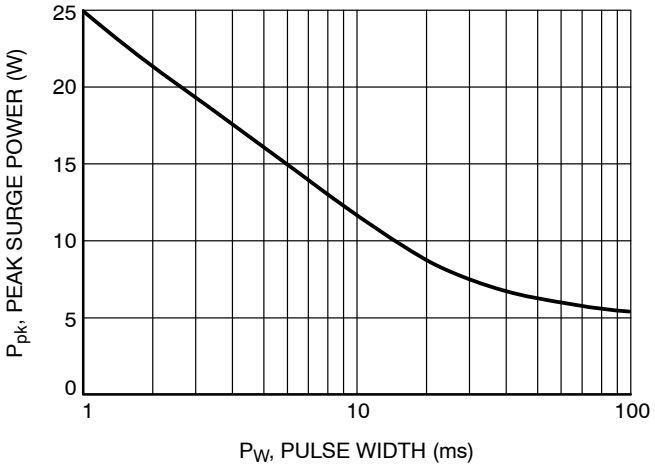

Figure 2. Maximum Non−repetitive Surge Power versus Pulse Width

Load Dump Pulse Not Suppressed:
V_R = 13.5 V Nominal ±10%
V_S = 60 V Nominal ±10%
T = 300 ms Nominal ±10%
T_R = 1 − 10 ms ±10%

Load Dump Pulse Suppressed:
NOTE: Max. Voltage DUT is exposed to is approximately 45 V.
V_S = 30 V ±20%
T = 150 ms ±20%

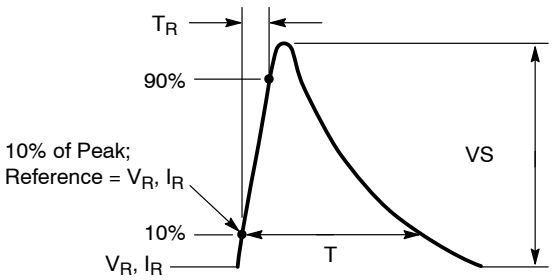

Figure 3. Load Dump Waveform Definition

Share Feedback
Your Opinion Matters

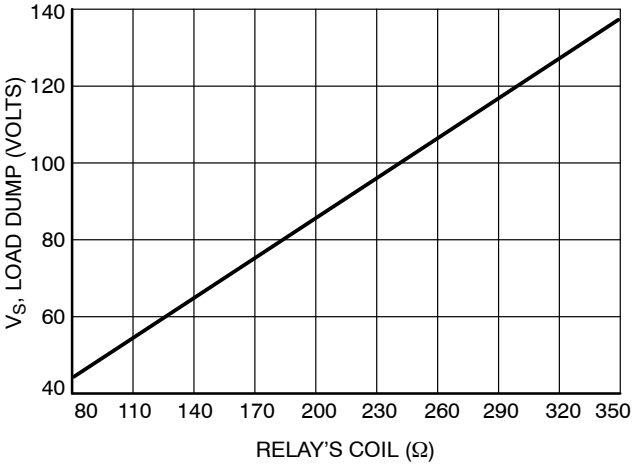

Figure 4. Load Dump Capability versus Relay's Coil dc Resistance

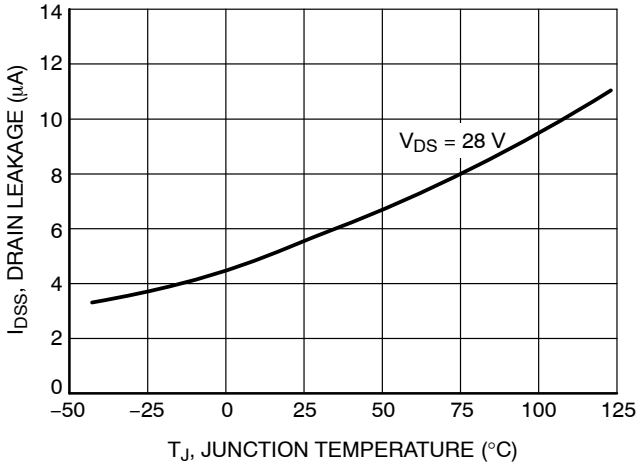

Figure 5. Drain−to−Source Leakage versus Junction Temperature

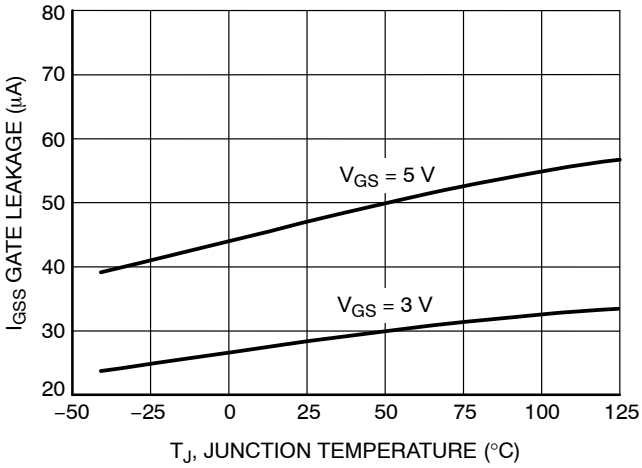

Figure 6. Gate−to−Source Leakage versus Junction Temperature

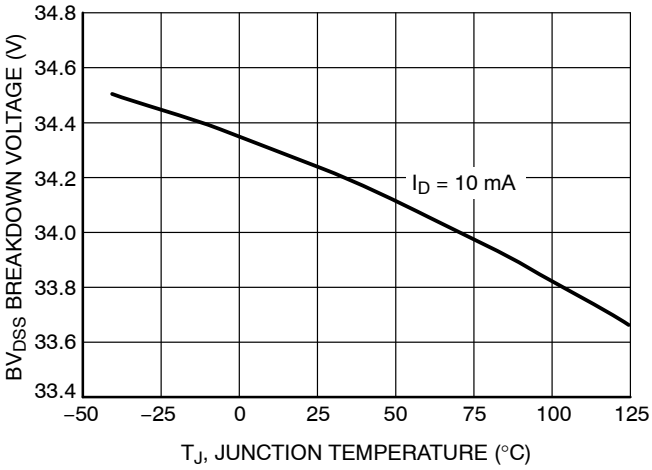

Figure 7. Breakdown Voltage versus Junction Temperature

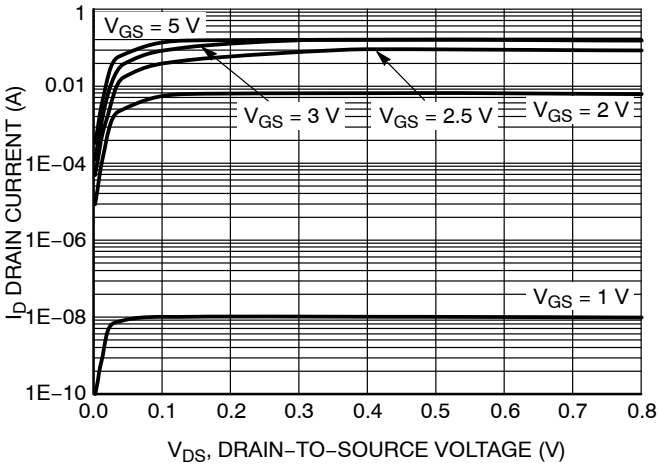

Figure 8. Output Characteristics

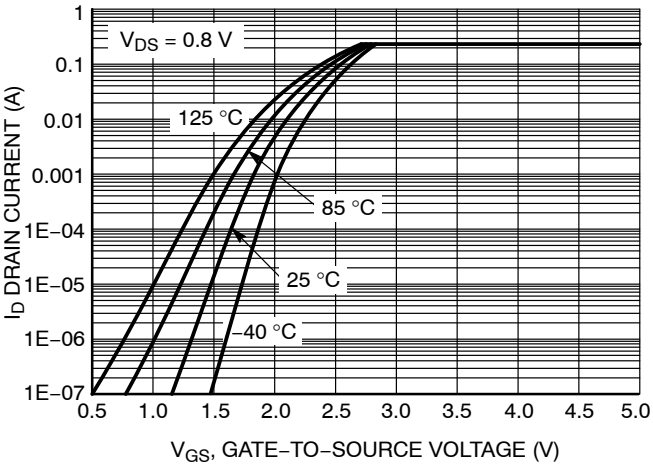

Figure 9. Transfer Function

Share Feedback
Your Opinion Matters

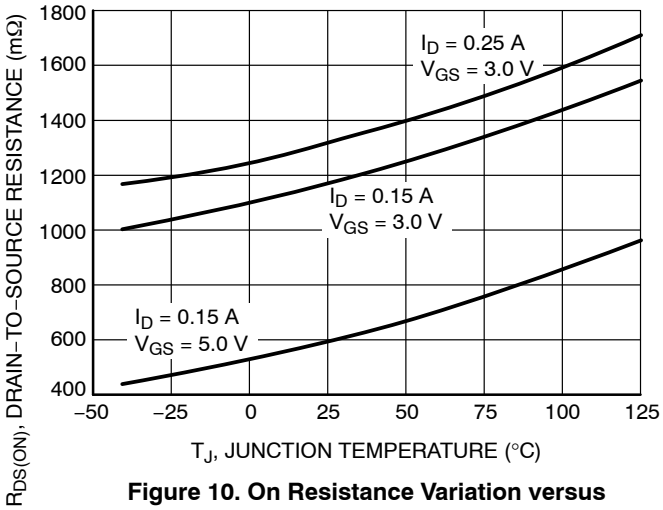

Figure 10. On Resistance Variation versus Junction Temperature

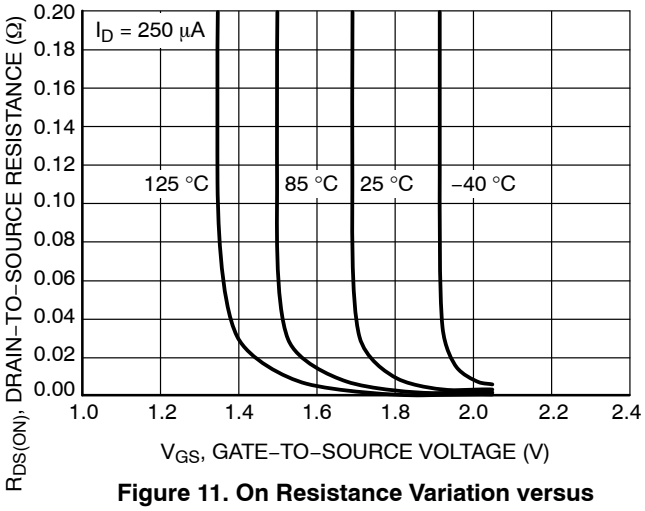

Figure 11. On Resistance Variation versus Gate−to−Source Voltage

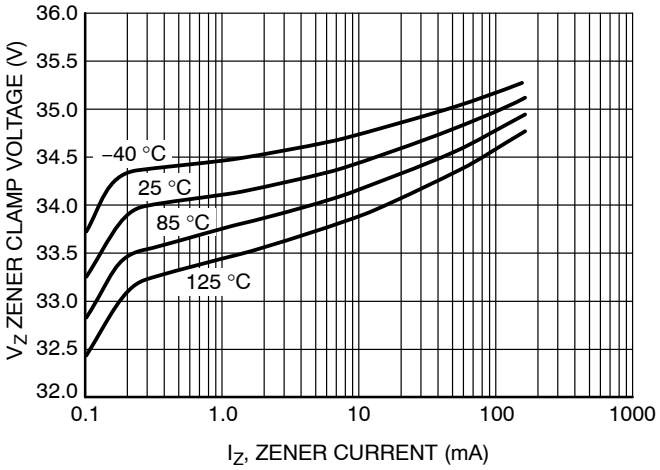

Figure 12. Zener Clamp Voltage versus Zener Current

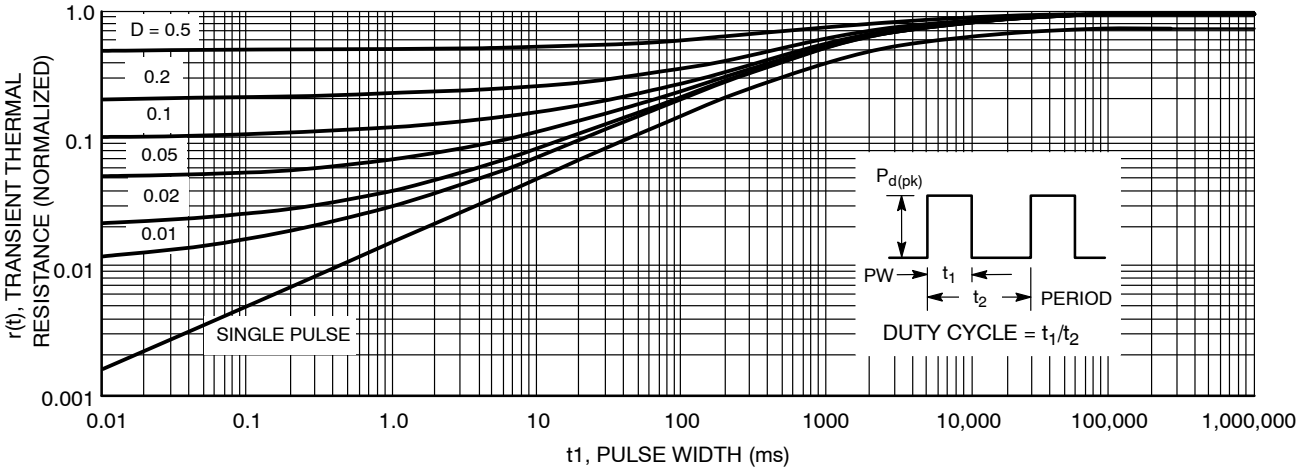

Figure 13. Transient Thermal Response for NUD3124LT1G

Share Feedback
Your Opinion Matters

APPLICATIONS INFORMATION

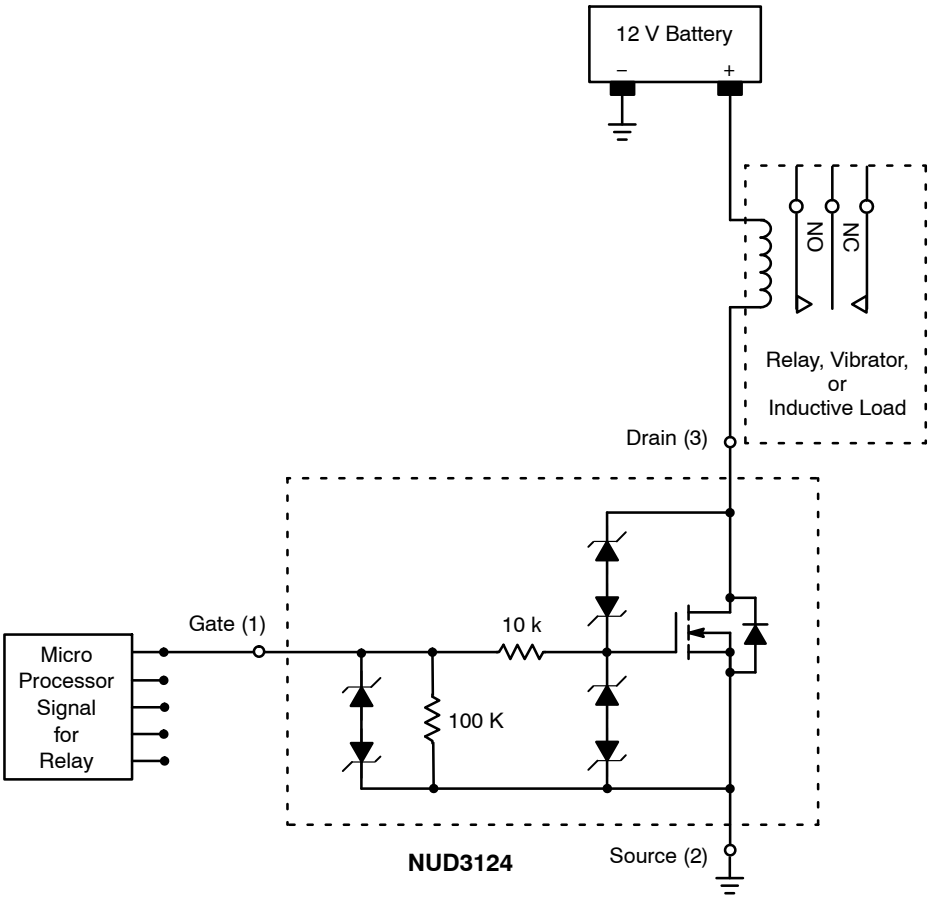

Figure 14. Applications Diagram

Share Feedback
Your Opinion Matters

SCALE 2:1

SC−74
CASE 318F
ISSUE P

DATE 07 OCT 2021

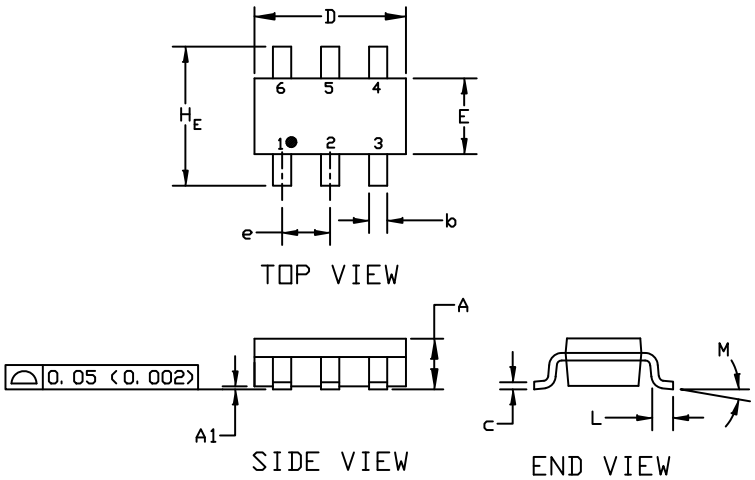

NOTES:
1. DIMENSIONING AND TOLERANCING PER ASME Y14.5M, 1994
2. CONTROLLING DIMENSION: INCHES
3. MAXIMUM LEAD THICKNESS INCLUDES LEAD FINISH THICKNESS. MINIMUM LEAD THICKNESS IS THE MINIMUM THICKNESS OF THE BASE MATERIAL.

	MILLIMETERS			INCHES		
DIM	MIN.	NOM.	MAX.	MIN.	NOM.	MAX.
A	0.90	1.00	1.10	0.035	0.039	0.043
A1	0.01	0.06	0.10	0.001	0.002	0.004
b	0.25	0.37	0.50	0.010	0.015	0.020
c	0.10	0.18	0.26	0.004	0.007	0.010
D	2.90	3.00	3.10	0.114	0.118	0.122
E	1.30	1.50	1.70	0.051	0.059	0.067
e	0.85	0.95	1.05	0.034	0.037	0.041
H_E	2.50	2.75	3.00	0.099	0.108	0.118
L	0.20	0.40	0.60	0.008	0.016	0.024
M	0°	---	10°	0°	---	10°

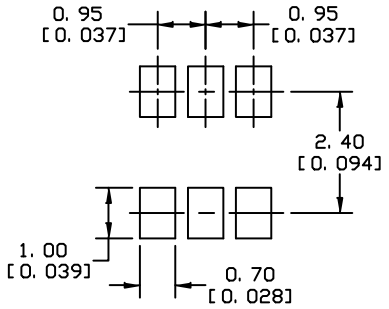

* For additional information on our Pb-Free strategy and soldering details, please download the ON Semiconductor Soldering and Mounting Techniques Reference Manual, SOLDERRM/D.

SOLDERING FOOTPRINT

GENERIC MARKING DIAGRAM*

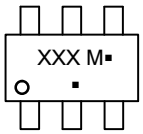

XXX = Specific Device Code
M = Date Code
▪ = Pb−Free Package

(Note: Microdot may be in either location)

*This information is generic. Please refer to device data sheet for actual part marking. Pb−Free indicator, “G” or microdot “▪”, may or may not be present. Some products may not follow the Generic Marking.

STYLE 1:
PIN 1. CATHODE
2. ANODE
3. CATHODE
4. CATHODE
5. ANODE
6. CATHODE

STYLE 2:
PIN 1. NO CONNECTION
2. COLLECTOR
3. EMITTER
4. NO CONNECTION
5. COLLECTOR
6. BASE

STYLE 3:
PIN 1. EMITTER 1
2. BASE 1
3. COLLECTOR 2
4. EMITTER 2
5. BASE 2
6. COLLECTOR 1

STYLE 4:
PIN 1. COLLECTOR 2
2. EMITTER 1/EMITTER 2
3. COLLECTOR 1
4. EMITTER 3
5. BASE 1/BASE 2/COLLECTOR 3
6. BASE 3

STYLE 5:
PIN 1. CHANNEL 1
2. ANODE
3. CHANNEL 2
4. CHANNEL 3
5. CATHODE
6. CHANNEL 4

STYLE 6:
PIN 1. CATHODE
2. ANODE
3. CATHODE
4. CATHODE
5. CATHODE
6. CATHODE

STYLE 7:
PIN 1. SOURCE 1
2. GATE 1
3. DRAIN 2
4. SOURCE 2
5. GATE 2
6. DRAIN 1

STYLE 8:
PIN 1. EMITTER 1
2. BASE 2
3. COLLECTOR 2
4. EMITTER 2
5. BASE 1
6. COLLECTOR 1

STYLE 9:
PIN 1. EMITTER 2
2. BASE 2
3. COLLECTOR 1
4. EMITTER 1
5. BASE 1
6. COLLECTOR 2

STYLE 10:
PIN 1. ANODE/CATHODE
2. BASE
3. EMITTER
4. COLLECTOR
5. ANODE
6. CATHODE

STYLE 11:
PIN 1. EMITTER
2. BASE
3. ANODE/CATHODE
4. ANODE
5. CATHODE
6. COLLECTOR

DOCUMENT NUMBER:	98ASB42973B	Electronic versions are uncontrolled except when accessed directly from the Document Repository. Printed versions are uncontrolled except when stamped “CONTROLLED COPY” in red.	
DESCRIPTION:	SC−74		PAGE 1 OF 1

onsemi and onsemi are trademarks of Semiconductor Components Industries, LLC dba **onsemi** or its subsidiaries in the United States and/or other countries. **onsemi** reserves the right to make changes without further notice to any products herein. **onsemi** makes no warranty, representation or guarantee regarding the suitability of its products for any particular purpose, nor does **onsemi** assume any liability arising out of the application or use of any product or circuit, and specifically disclaims any and all liability, including without limitation special, consequential or incidental damages. **onsemi** does not convey any license under its patent rights nor the rights of others.

onsemi, onsemi, and other names, marks, and brands are registered and/or common law trademarks of Semiconductor Components Industries, LLC dba "**onsemi**" or its affiliates and/or subsidiaries in the United States and/or other countries. **onsemi** owns the rights to a number of patents, trademarks, copyrights, trade secrets, and other intellectual property. A listing of **onsemi**'s product/patent coverage may be accessed at www.onsemi.com/site/pdf/Patent−Marking.pdf. **onsemi** reserves the right to make changes at any time to any products or information herein, without notice. The information herein is provided "as−is" and **onsemi** makes no warranty, representation or guarantee regarding the accuracy of the information, product features, availability, functionality, or suitability of its products for any particular purpose, nor does **onsemi** assume any liability arising out of the application or use of any product or circuit, and specifically disclaims any and all liability, including without limitation special, consequential or incidental damages. Buyer is responsible for its products and applications using **onsemi** products, including compliance with all laws, regulations and safety requirements or standards, regardless of any support or applications information provided by **onsemi**. "Typical" parameters which may be provided in **onsemi** data sheets and/or specifications can and do vary in different applications and actual performance may vary over time. All operating parameters, including "Typicals" must be validated for each customer application by customer's technical experts. **onsemi** does not convey any license under any of its intellectual property rights nor the rights of others. **onsemi** products are not designed, intended, or authorized for use as a critical component in life support systems or any FDA Class 3 medical devices or medical devices with a same or similar classification in a foreign jurisdiction or any devices intended for implantation in the human body. Should Buyer purchase or use **onsemi** products for any such unintended or unauthorized application, Buyer shall indemnify and hold **onsemi** and its officers, employees, subsidiaries, affiliates, and distributors harmless against all claims, costs, damages, and expenses, and reasonable attorney fees arising out of, directly or indirectly, any claim of personal injury or death associated with such unintended or unauthorized use, even if such claim alleges that **onsemi** was negligent regarding the design or manufacture of the part. **onsemi** is an Equal Opportunity/Affirmative Action Employer. This literature is subject to all applicable copyright laws and is not for resale in any manner.

ADDITIONAL INFORMATION

TECHNICAL PUBLICATIONS:
Technical Library: www.onsemi.com/design/resources/technical−documentation
onsemi Website: www.onsemi.com

ONLINE SUPPORT: www.onsemi.com/support
For additional information, please contact your local Sales Representative at
www.onsemi.com/support/sales