Octal 3-State Noninverting D Flip-Flop

High−Performance Silicon−Gate CMOS

MC74HC574A, MC74HCT574A

The MC74HC574A/MC74HCT574A is identical in pinout to the LS574. The MC74HC574A inputs are compatible with standard CMOS outputs; with pull−up resistors, they are compatible with LSTTL outputs. The MC74HCT574A may be used as a level converter for interfacing TTL or NMOS outputs to High Speed CMOS inputs.

Data meeting the set−up time is clocked to the outputs with the rising edge of the Clock. The Output Enable input does not affect the states of the flip−flops but when Output Enable is high, all device outputs are forced to the high−impedance state. Thus, data may be stored even when the outputs are not enabled.

The HC574A/HCT574A is identical in function to the HC374A/HCT374A but has the flip−flop inputs on the opposite side of the package from the outputs to facilitate PC board layout.

Features

- Output Drive Capability: 15 LSTTL Loads
- Outputs Directly Interface to CMOS, NMOS, and TTL
- Operating Voltage Range: 2.0 to 6.0 V (HC), 4.5 to 5.5 V (HCT)
- Low Input Current: 1.0 μA
- In Compliance with the Requirements Defined by JEDEC Standard No. 7 A
- Chip Complexity: 286 FETs or 71.5 Equivalent Gates
- −Q Suffix for Automotive and Other Applications Requiring Unique Site and Control Change Requirements; AEC−Q100 Qualified and PPAP Capable
- These Devices are Pb−Free and are RoHS Compliant

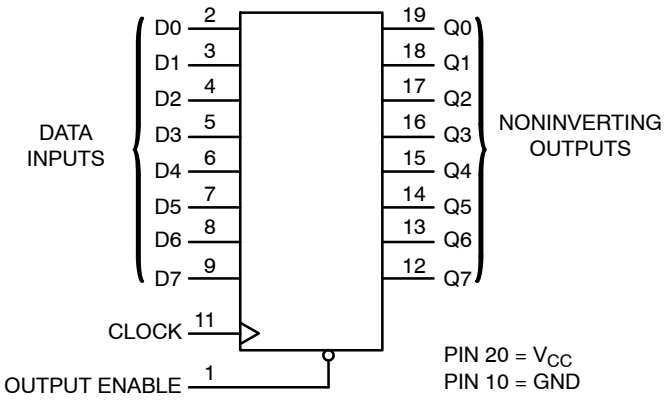

Figure 1. Logic Diagram

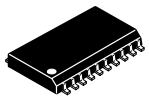

SOIC−20
DW SUFFIX
CASE 751D

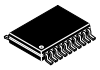

TSSOP−20
DT SUFFIX
CASE 948E

PIN ASSIGNMENT

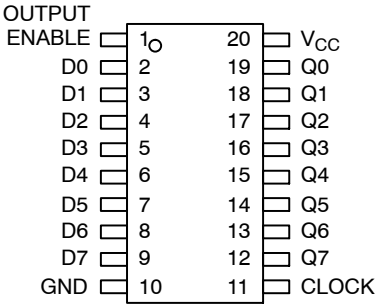

MARKING DIAGRAMS

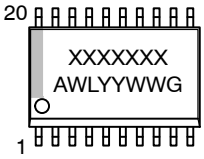

SOIC−20

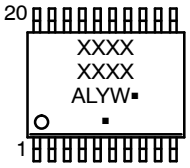

TSSOP−20

XXXXXXXX	= Specific Device Code
A	= Assembly Location
WL, L	= Wafer Lot
YY, Y	= Year
WW, W	= Work Week
G or ▪	= Pb−Free Package

(Note: Microdot may be in either location)

FUNCTION TABLE

Inputs			Output
OE	**Clock**	**D**	**Q**
L	↗	H	H
L	↗	L	L
L	L,H,↘	X	No Change
H	X	X	Z

X = Don't Care
Z = High Impedance

ORDERING INFORMATION

See detailed ordering and shipping information on page 8 of this data sheet.

NOTE: Some of the devices on this data sheet have been **DISCONTINUED**. Please refer to the table on page 8.

© Semiconductor Components Industries, LLC, 2014

MAXIMUM RATINGS

Symbol	Parameter		Value	Unit
V_{CC}	DC Supply Voltage		−0.5 to +6.5	V
V_{IN}	DC Input Voltage		−0.5 to V_{CC}+0.5	V
V_{OUT}	DC Output Voltage		−0.5 to V_{CC}+0.5	V
I_{IN}	DC Input Diode Current, per Pin		±20	mA
I_{OUT}	DC Input Diode Current, Per Pin		±35	mA
I_{CC}	DC Supply Current, V_{CC} and GND Pins		±75	mA
I_{IK}	Input Clamp Current (V_{IN} < 0 or V_{IN} > V_{CC})		±20	mA
I_{OK}	Output Clamp Current (V_{OUT} < 0 or V_{OUT} > V_{CC})		±20	mA
T_{STG}	Storage Temperature Range		−65 to +150	°C
T_L	Lead Temperature, 1 mm from Case for 10 secs		260	°C
T_J	Junction Temperature Under Bias		+150	°C
θ_{JA}	Thermal Resistance (Note 1)	SOIC−20W WQFN20 QFN20 TSSOP−20	96 99 111 150	°C/W
P_D	Power Dissipation in Still Air at 25°C	SOIC−20W WQFN20 QFN20 TSSOP−20	1302 1256 1127 833	mW
MSL	Moisture Sensitivity	SOIC−20W All Other Packages	Level 3 Level 1	–
F_R	Flammability Rating	Oxygen Index: 28 to 34	UL 94 V−0 @ 0.125 in	–
V_{ESD}	ESD Withstand Voltage (Note 2)	Human Body Model Charged Device Model	> 4000 > 1000	V
$I_{LATCHUP}$	Latchup Performance (Note 3)		±100	mA

Stresses exceeding those listed in the Maximum Ratings table may damage the device. If any of these limits are exceeded, device functionality should not be assumed, damage may occur and reliability may be affected.

1. Measured with minimum pad spacing on an FR4 board, using 76 mm−by−114 mm, 2−ounce copper trace no air flow per JESD51−7.
2. HBM tested to EIA / JESD22−A114−A. CDM tested to JESD22−C101−A. JEDEC recommends that ESD qualification to EIA/JESD22−A115A (Machine Model) be discontinued.
3. Tested to EIA/JESD78 Class II.

RECOMMENDED OPERATING CONDITIONS

Symbol	Parameter		Min	Max	Unit
MC74HC					
V_{CC}	DC Supply Voltage		2.0	6.0	V
V_{IN}, V_{OUT}	DC Input Voltage, Output Voltage (Note 4)		0	V_{CC}	V
T_A	Operating Free−Air Temperature		−55	+125	°C
t_r, t_f	Input Rise or Fall Time	V_{CC} = 2.0 V V_{CC} = 4.5 V V_{CC} = 6.0 V	0 0 0	1000 500 400	ns
MC74HCT					
V_{CC}	DC Supply Voltage		4.5	5.5	V
V_{IN}, V_{OUT}	DC Input Voltage, Output Voltage (Note 4)		0	V_{CC}	V
T_A	Operating Free−Air Temperature		−55	+125	°C
t_r, t_f	Input Rise or Fall Time		0	500	ns

Functional operation above the stresses listed in the Recommended Operating Ranges is not implied. Extended exposure to stresses beyond the Recommended Operating Ranges limits may affect device reliability.

4. Unused inputs must always be tied to an appropriate logic voltage level (e.g., either GND or V_{CC}). Unused outputs must be left open.

Share Feedback
Your Opinion Matters

DC ELECTRICAL CHARACTERISTICS (MC74HC574A)

Symbol	Parameter	Test Conditions	V_{CC} V	Guaranteed Limit			Unit
				−55 to 25°C	≤ 85°C	≤ 125°C	
V_{IH}	Minimum High−Level Input Voltage	$V_{out} = V_{CC} - 0.1$ V $\|I_{out}\| \le 20$ μA	2.0 3.0 4.5 6.0	1.5 2.1 3.15 4.2	1.5 2.1 3.15 4.2	1.5 2.1 3.15 4.2	V
V_{IL}	Maximum Low−Level Input Voltage	$V_{out} = 0.1$ V $\|I_{out}\| \le 20$ μA	2.0 3.0 4.5 6.0	0.5 0.9 1.35 1.8	0.5 0.9 1.35 1.8	0.5 0.9 1.35 1.8	V
V_{OH}	Minimum High−Level Output Voltage	$V_{in} = V_{IH}$ $\|I_{out}\| \le 20$ μA	2.0 4.5 6.0	1.9 4.4 5.9	1.9 4.4 5.9	1.9 4.4 5.9	V
V_{OH}	Minimum High−Level Output Voltage	$V_{in} = V_{IH}$ $\|I_{out}\| \le 2.4$ mA $\|I_{out}\| \le 6.0$ mA $\|I_{out}\| \le 7.8$ mA	3.0 4.5 6.0	2.48 3.98 5.48	2.34 3.84 5.34	2.2 3.7 5.2	V
V_{OL}	Maximum Low−Level Output Voltage	$V_{in} = V_{IL}$ $\|I_{out}\| \le 20$ μA	2.0 4.5 6.0	0.1 0.1 0.1	0.1 0.1 0.1	0.1 0.1 0.1	V
		$V_{in} = V_{IL}$ $\|I_{out}\| \le 2.4$ mA $\|I_{out}\| \le 6.0$ mA $\|I_{out}\| \le 7.8$ mA	3.0 4.5 6.0	0.26 0.26 0.26	0.33 0.33 0.33	0.4 0.4 0.4	
I_{in}	Maximum Input Leakage Current	$V_{in} = V_{CC}$ or GND	6.0	±0.1	±1.0	±1.0	μA
I_{OZ}	Maximum Three−State Leakage Current	Output in High−Impedance State $V_{in} = V_{IL}$ or V_{IH} $V_{out} = V_{CC}$ or GND	6.0	±0.5	±5.0	±10	μA
I_{CC}	Maximum Quiescent Supply Current (per Package)	$V_{in} = V_{CC}$ or GND $I_{out} = 0$ μA	6.0	4.0	40	160	μA

Product parametric performance is indicated in the Electrical Characteristics for the listed test conditions, unless otherwise noted. Product performance may not be indicated by the Electrical Characteristics if operated under different conditions.

Share Feedback
Your Opinion Matters

AC ELECTRICAL CHARACTERISTICS (MC74HC574A)

Symbol	Parameter	V_{CC} V	Guaranteed Limit −55 to 25°C	≤ 85°C	≤ 125°C	Unit
f_{max}	Maximum Clock Frequency (50% Duty Cycle) (Figures 2 and 3)	2.0 3.0 4.5 6.0	6.0 15 30 35	4.8 10 24 28	4.0 8.0 20 24	MHz
t_{PLH}, t_{PHL}	Maximum Propagation Delay, Clock to Q (Figures 2 and 3)	2.0 3.0 4.5 6.0	160 105 32 27	200 145 40 34	240 190 48 41	ns
t_{PLZ}, t_{PHZ}	Maximum Propagation Delay, Output Enable to Q (Figures 2 and 4)	2.0 3.0 4.5 6.0	150 100 30 26	190 125 38 33	225 150 45 38	ns
t_{PZL}, t_{PZH}	Maximum Propagation Delay, Output Enable to Q (Figures 2 and 4)	2.0 3.0 4.5 6 0	140 90 28 24	175 120 35 30	210 140 42 36	ns
t_{TLH}, t_{THL}	Maximum Output Transition Time, any Output (Figures 2 and 3)	2.0 3.0 4.5 6.0	60 27 12 10	75 32 15 13	90 36 18 15	ns
C_{in}	Maximum Input Capacitance		10	10	10	pF
C_{out}	Maximum Three−State Output Capacitance, Output in High−Impedance State		15	15	15	pF

		Typical @ 25°C, V_{CC} = 5.0 V	
C_{PD}	Power Dissipation Capacitance (Per Enabled Output)*	24	pF

Product parametric performance is indicated in the Electrical Characteristics for the listed test conditions, unless otherwise noted. Product performance may not be indicated by the Electrical Characteristics if operated under different conditions.
*Used to determine the no−load dynamic power consumption: $P_D = C_{PD} V_{CC}^2 f + I_{CC} V_{CC}$.

TIMING REQUIREMENTS (MC74HC574A)

Symbol	Parameter	Figure	V_{CC} V	Guaranteed Limit −55 to 25°C Min	−55 to 25°C Max	≤ 85°C Min	≤ 85°C Max	≤ 125°C Min	≤ 125°C Max	Unit
t_{su}	Minimum Setup Time, Data to Clock	5	2.0 3.0 4.6 6.0	50 40 10 9.0		65 50 13 11		75 60 15 13		ns
t_h	Minimum Hold Time, Clock to Data	5	2.0 3.0 4.5 6.0	5.0 5.0 5.0 5.0		5.0 5.0 5.0 5.0		5.0 5.0 5.0 5.0		ns
t_w	Minimum Pulse Width, Clock	3	2.0 3.0 4.5 6.0	75 60 15 13		95 80 19 16		110 90 22 19		ns
t_r, t_f	Maximum Input Rise and Fall Times	3	2.0 3.0 4.5 6.0		1000 800 500 400		1000 800 500 400		1000 800 500 400	ns

Share Feedback
Your Opinion Matters

DC ELECTRICAL CHARACTERISTICS (MC74HCT574A)

Symbol	Parameter	Test Conditions	V_{CC} V	Guaranteed Limit –55 to 25°C	≤ 85°C	≤ 125°C	Unit
V_{IH}	Minimum High–Level Input Voltage	V_{out} = 0.1 V or V_{CC} – 0.1 V $\|I_{out}\| \le 20\ \mu A$	4.5 5.5	2.0 2.0	2.0 2.0	2.0 2.0	V
V_{IL}	Maximum Low–Level Input Voltage	V_{out} = 0.1 V or V_{CC} – 0.1 V $\|I_{out}\| \le 20\ \mu A$	4.5 5.5	0.8 0.8	0.8 0.8	0.8 0.8	V
V_{OH}	Minimum High–Level Output Voltage	$V_{in} = V_{IH}$ or V_{IL} $\|I_{out}\| \le 20\ \mu A$	4.5 5.5	4.4 5.4	4.4 5.4	4.4 5.4	
		$V_{in} = V_{IH}$ or V_{IL} $\|I_{out}\| \le 6.0$ mA	4.5	3.98	3.84	3.7	V
V_{OL}	Maximum Low–Level Output Voltage	$V_{in} = V_{IH}$ or V_{IL} $\|I_{out}\| \le 20\ \mu A$	4.5 5.5	0.1 0.1	0.1 0.1	0.1 0.1	
		$V_{in} = V_{IH}$ or V_{IL} $\|I_{out}\| \le 6.0$ mA	4.5	0.26	0.33	0.4	
I_{in}	Maximum Input Leakage Current	$V_{in} = V_{CC}$ or GND	5.5	±0.1	±1.0	±1.0	μA
I_{CC}	Maximum Quiescent Supply Current (per Package)	$V_{in} = V_{CC}$ or GND $I_{out} = 0\ \mu A$	5.5	4.0	40	160	μA
I_{OZ}	Maximum Three–State Leakage Current	$V_{in} = V_{IL}$ or V_{IH} (Note 1) $V_{out} = V_{CC}$ or GND	5.5	–0.5	–5.0	–10	μA

				≥ –55°C	25°C to 125°C	
ΔI_{CC}	Additional Quiescent Supply Current	V_{in} = 2.4 V, Any One Input $V_{in} = V_{CC}$ or GND, Other Inputs $I_{out} = 0\ \mu A$	5.5	2.9	2.4	mA

Product parametric performance is indicated in the Electrical Characteristics for the listed test conditions, unless otherwise noted. Product performance may not be indicated by the Electrical Characteristics if operated under different conditions.

5. Output in high–impedance state.

Share Feedback
Your Opinion Matters

AC ELECTRICAL CHARACTERISTICS (MC74HCT574A)

Symbol	Parameter	Guaranteed Limit			Unit
		–55 to 25°C	≤ 85°C	≤ 125°C	
f_{MAX}	Maximum Clock Frequency (50% Duty Cycle) (Figures 2 and 3)	30	24	20	MHz
t_{PLH}, t_{PHL}	Maximum Propagation Delay, Clock to Q (Figures 2 and 3)	30	38	45	ns
t_{PLZ}, t_{PHZ}	Maximum Propagation Delay, Output Enable to Q (Figures 2 and 4)	28	35	42	ns
t_{PZH}, t_{PZL}	Maximum Propagation Delay Time, Output Enable to Q (Figures 2 and 4)	28	35	42	ns
t_{TLH}, t_{THL}	Maximum Output Transition Time, Any Output (Figures 2 and 3)	12	15	18	ns
C_{in}	Maximum Input Capacitance	10	10	10	pF

		Typical @ 25°C, V_{CC} = 5.0 V	
C_{PD}	Power Dissipation Capacitance (Per Flip–Flop)*	58	pF

Product parametric performance is indicated in the Electrical Characteristics for the listed test conditions, unless otherwise noted. Product performance may not be indicated by the Electrical Characteristics if operated under different conditions.
*Used to determine the no–load dynamic power consumption: $P_D = C_{PD} V_{CC}^2 f + I_{CC} V_{CC}$.

TIMING REQUIREMENTS (MC74HCT574A)

Symbol	Parameter	Figure	Guaranteed Limit						Unit
			–55 to 25°C		≤ 85°C		≤ 125°C		
			Min	Max	Min	Max	Min	Max	
t_{su}	Minimum Setup Time, Data to Clock	5	10		13		15		ns
t_h	Minimum Hold Time, Clock to Data	5	5.0		5.0		5.0		ns
t_w	Minimum Pulse Width, Clock	3	15		19		22		ns
t_r, t_f	Maximum Input Rise and Fall Times	3		500		500		500	ns

Share Feedback
Your Opinion Matters

SWITCHING WAVEFORMS

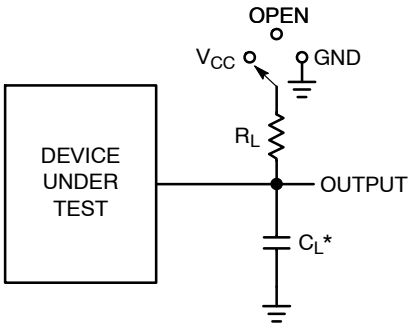

*C_L Includes probe and jig capacitance

Test	Switch Position	C_L	R_L
t_{PLH} / t_{PHL}	Open	50 pF	1 kΩ
t_{PLZ} / t_{PZL}	V_{CC}		
t_{PHZ} / t_{PZH}	GND		

Figure 2. Test Circuit

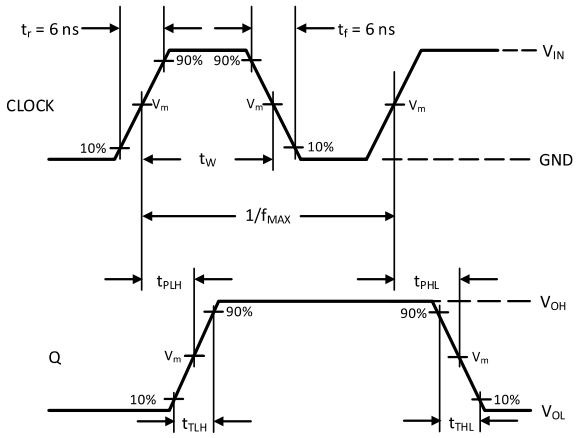

Figure 3.

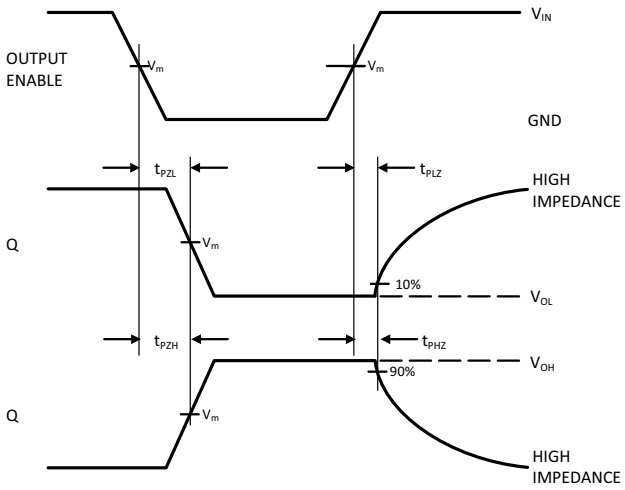

Figure 4.

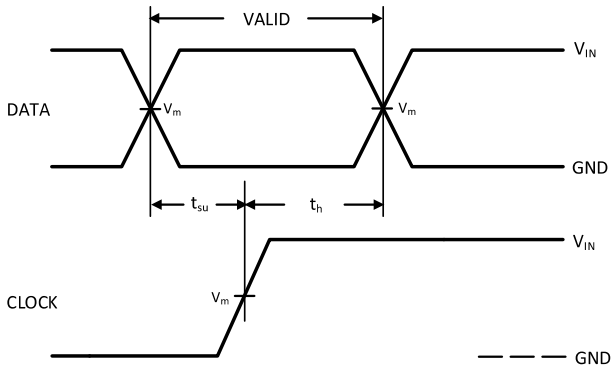

Figure 5.

Device	V_{IN}, V	V_m, V
MC74HC574A	V_{CC}	50% x V_{CC}
MC74HCT574A	3 V	1.3 V

Share Feedback
Your Opinion Matters

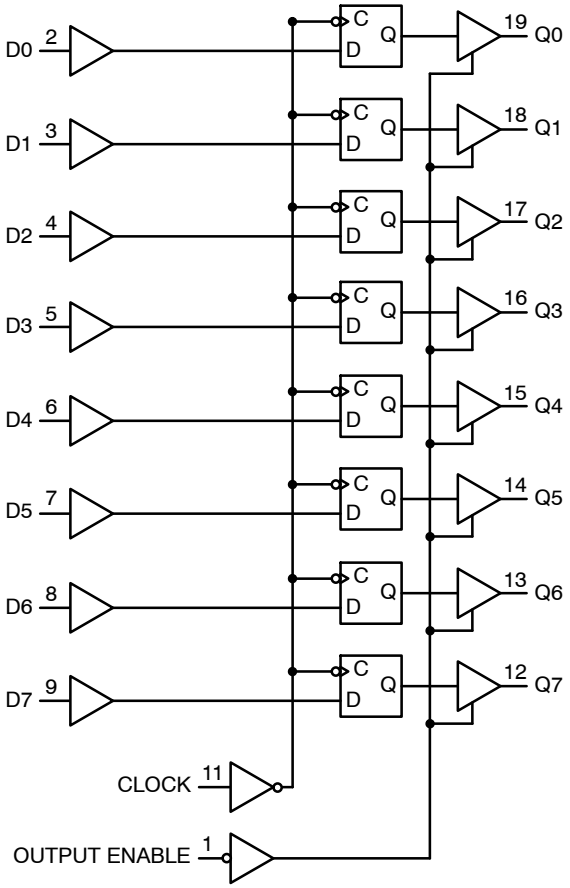

Figure 6. Expanded Logic Diagram

ORDERING INFORMATION

Device	Marking	Package	Shipping†
MC74HC574ADWG	HC574A	SOIC−20 Wide	38 Units / Rail
MC74HC574ADWR2G	HC574A	SOIC−20 Wide	1000 Units / Tape & Reel
MC74HC574ADWR2G−Q*	HC574A	SOIC−20 Wide	1000 Units / Tape & Reel
MC74HC574ADTR2G	HC 574A	TSSOP−20	2500 Units / Tape & Reel
MC74HC574ADTR2G−Q*	HC 574A	TSSOP−20	2500 Units / Tape & Reel
MC74HCT574ADWR2G	HCT574A	SOIC−20 Wide	1000 Units / Tape & Reel
MC74HCT574ADWR2G−Q*	HCT574A	SOIC−20 Wide	1000 Units / Tape & Reel
MC74HCT574ADTR2G	HCT 574A	TSSOP−20	2500 Units / Tape & Reel
MC74HCT574ADTR2G−Q*	HCT 574A	TSSOP−20	2500 Units / Tape & Reel

DISCONTINUED (Note 6)

MC74HCT574ADWG	HCT574A	SOIC−20 Wide	38 Units / Rail

†For information on tape and reel specifications, including part orientation and tape sizes, please refer to our Tape and Reel Packaging Specifications Brochure, BRD8011/D.

*−Q Suffix for Automotive and Other Applications Requiring Unique Site and Control Change Requirements; AEC−Q100 Qualified and PPAP Capable.

6. **DISCONTINUED:** This device is not recommended for new design. Please contact your **onsemi** representative for information. The most current information on this device may be available on www.onsemi.com.

Share Feedback
Your Opinion Matters

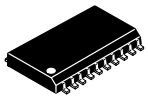

SCALE 1:1

SOIC−20 WB
CASE 751D−05
ISSUE H

DATE 22 APR 2015

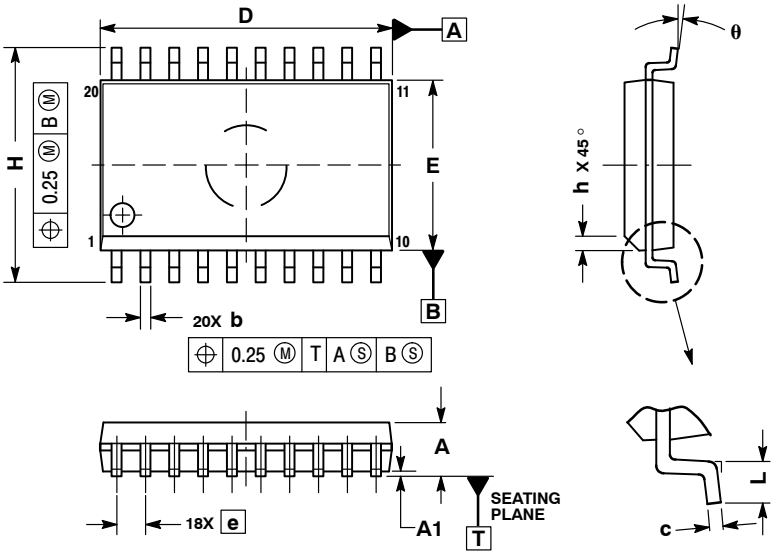

NOTES:
1. DIMENSIONS ARE IN MILLIMETERS.
2. INTERPRET DIMENSIONS AND TOLERANCES PER ASME Y14.5M, 1994.
3. DIMENSIONS D AND E DO NOT INCLUDE MOLD PROTRUSION.
4. MAXIMUM MOLD PROTRUSION 0.15 PER SIDE.
5. DIMENSION B DOES NOT INCLUDE DAMBAR PROTRUSION. ALLOWABLE PROTRUSION SHALL BE 0.13 TOTAL IN EXCESS OF B DIMENSION AT MAXIMUM MATERIAL CONDITION.

	MILLIMETERS	
DIM	MIN	MAX
A	2.35	2.65
A1	0.10	0.25
b	0.35	0.49
c	0.23	0.32
D	12.65	12.95
E	7.40	7.60
e	1.27 BSC	
H	10.05	10.55
h	0.25	0.75
L	0.50	0.90
θ	0°	7°

RECOMMENDED SOLDERING FOOTPRINT*

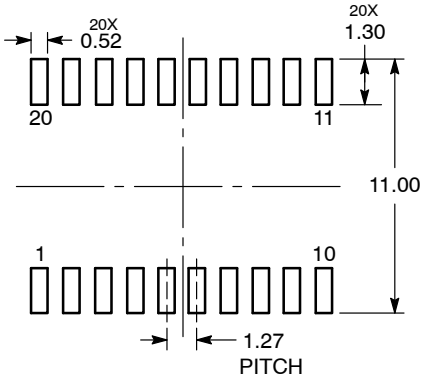

DIMENSIONS: MILLIMETERS

*For additional information on our Pb−Free strategy and soldering details, please download the **onsemi** Soldering and Mounting Techniques Reference Manual, SOLDERRM/D.

GENERIC MARKING DIAGRAM*

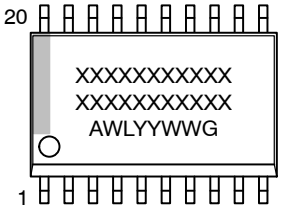

XXXXX = Specific Device Code
A = Assembly Location
WL = Wafer Lot
YY = Year
WW = Work Week
G = Pb−Free Package

*This information is generic. Please refer to device data sheet for actual part marking. Pb−Free indicator, "G" or microdot "▪", may or may not be present. Some products may not follow the Generic Marking.

DOCUMENT NUMBER:	98ASB42343B	Electronic versions are uncontrolled except when accessed directly from the Document Repository. Printed versions are uncontrolled except when stamped "CONTROLLED COPY" in red.
DESCRIPTION:	SOIC−20 WB	PAGE 1 OF 1

onsemi and onsemi are trademarks of Semiconductor Components Industries, LLC dba **onsemi** or its subsidiaries in the United States and/or other countries. **onsemi** reserves the right to make changes without further notice to any products herein. **onsemi** makes no warranty, representation or guarantee regarding the suitability of its products for any particular purpose, nor does **onsemi** assume any liability arising out of the application or use of any product or circuit, and specifically disclaims any and all liability, including without limitation special, consequential or incidental damages. **onsemi** does not convey any license under its patent rights nor the rights of others.

onsemi, onsemi, and other names, marks, and brands are registered and/or common law trademarks of Semiconductor Components Industries, LLC dba "**onsemi**" or its affiliates and/or subsidiaries in the United States and/or other countries. **onsemi** owns the rights to a number of patents, trademarks, copyrights, trade secrets, and other intellectual property. A listing of **onsemi**'s product/patent coverage may be accessed at www.onsemi.com/site/pdf/Patent−Marking.pdf. **onsemi** reserves the right to make changes at any time to any products or information herein, without notice. The information herein is provided "as−is" and **onsemi** makes no warranty, representation or guarantee regarding the accuracy of the information, product features, availability, functionality, or suitability of its products for any particular purpose, nor does **onsemi** assume any liability arising out of the application or use of any product or circuit, and specifically disclaims any and all liability, including without limitation special, consequential or incidental damages. Buyer is responsible for its products and applications using **onsemi** products, including compliance with all laws, regulations and safety requirements or standards, regardless of any support or applications information provided by **onsemi**. "Typical" parameters which may be provided in **onsemi** data sheets and/or specifications can and do vary in different applications and actual performance may vary over time. All operating parameters, including "Typicals" must be validated for each customer application by customer's technical experts. **onsemi** does not convey any license under any of its intellectual property rights nor the rights of others. **onsemi** products are not designed, intended, or authorized for use as a critical component in life support systems or any FDA Class 3 medical devices or medical devices with a same or similar classification in a foreign jurisdiction or any devices intended for implantation in the human body. Should Buyer purchase or use **onsemi** products for any such unintended or unauthorized application, Buyer shall indemnify and hold **onsemi** and its officers, employees, subsidiaries, affiliates, and distributors harmless against all claims, costs, damages, and expenses, and reasonable attorney fees arising out of, directly or indirectly, any claim of personal injury or death associated with such unintended or unauthorized use, even if such claim alleges that **onsemi** was negligent regarding the design or manufacture of the part. **onsemi** is an Equal Opportunity/Affirmative Action Employer. This literature is subject to all applicable copyright laws and is not for resale in any manner.

ADDITIONAL INFORMATION

TECHNICAL PUBLICATIONS:
Technical Library: www.onsemi.com/design/resources/technical−documentation
onsemi Website: www.onsemi.com

ONLINE SUPPORT: www.onsemi.com/support
For additional information, please contact your local Sales Representative at
www.onsemi.com/support/sales