Dual Monostable Multivibrator

MC14528B

The MC14528B is a dual, retriggerable, resettable monostable multivibrator. It may be triggered from either edge of an input pulse, and produces an output pulse over a wide range of widths, the duration of which is determined by the external timing components, C_X and R_X.

Features

- Separate Reset Available
- Diode Protection on All Inputs
- Triggerable from Leading or Trailing Edge Pulse
- Supply Voltage Range = 3.0 Vdc to 18 Vdc
- Capable of Driving Two Low-power TTL Loads or One Low-power Schottky TTL Load Over the Rated Temperature Range
- This part should only be used in new designs where the pulse width is < 10 μs
  Note: For designs requiring a pulse width > 10 μs, please see MC14538, which is pin-for-pin compatible
- NLV Prefix for Automotive and Other Applications Requiring Unique Site and Control Change Requirements; AEC-Q100 Qualified and PPAP Capable
- This Device is Pb-Free and is RoHS Compliant

MAXIMUM RATINGS (Voltages Referenced to V_{SS})

Rating	Symbol	Value	Unit
DC Supply Voltage Range	V_{DD}	−0.5 to +18.0	V
Input or Output Voltage Range (DC or Transient)	V_{in}, V_{out}	−0.5 to V_{DD} + 0.5	V
Input or Output Current (DC or Transient) per Pin	I_{in}, I_{out}	±10	mA
Power Dissipation, per Package (Note 1)	P_D	500	mW
Ambient Temperature Range	T_A	−55 to +125	°C
Storage Temperature Range	T_{stg}	−65 to +150	°C
Lead Temperature (8-Second Soldering)	T_L	260	°C

Stresses exceeding those listed in the Maximum Ratings table may damage the device. If any of these limits are exceeded, device functionality should not be assumed, damage may occur and reliability may be affected. Operating the device outside its recommended conditions, but still within its maximum rated limits may not cause immediate damage. However, doing so can lead to reduced performance, unpredictable behavior, and potentially shorten the device's lifespan or reliability.

1. Temperature Derating: "D/DW" Package: –7.0 mW/°C From 65 °C To 125 °C

This device contains protection circuitry to guard against damage due to high static voltages or electric fields. However, precautions must be taken to avoid applications of any voltage higher than maximum rated voltages to this high-impedance circuit. For proper operation, V_{in} and V_{out} should be constrained to the range $V_{SS} \le (V_{in}$ or $V_{out}) \le V_{DD}$.

Unused inputs must always be tied to an appropriate logic voltage level (e.g., either V_{SS} or V_{DD}). Unused outputs must be left open.

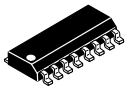

1

SOIC-16
D SUFFIX
CASE 751B

PIN ASSIGNMENT

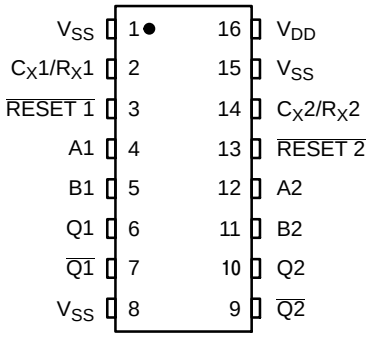

MARKING DIAGRAM

A = Assembly Location
WL = Wafer Lot
YY, Y = Year
WW, W = Work Week
G = Pb-Free Package

ORDERING INFORMATION

See detailed ordering and shipping information in the package dimensions section on page 5 of this data sheet.

© Semiconductor Components Industries, LLC, 2014

ONE-SHOT SELECTION GUIDE

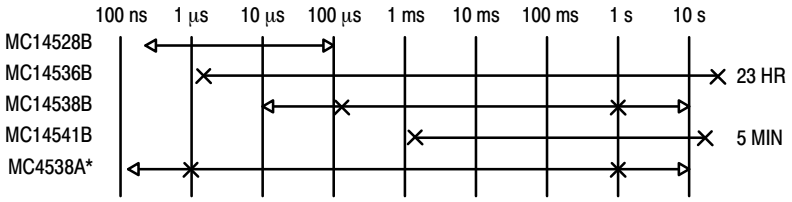

*LIMITED OPERATING VOLTAGE (2–6 V)

TOTAL OUTPUT PULSE WIDTH RANGE
RECOMMENDED PULSE WIDTH RANGE

BLOCK DIAGRAM

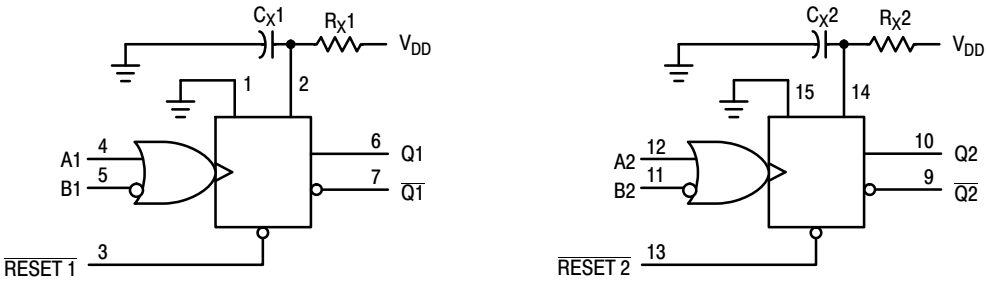

V_{DD} = PIN 16
V_{SS} = PIN 1, PIN 8, PIN 15
R_X AND C_X ARE EXTERNAL COMPONENTS

FUNCTION TABLE

Inputs			Outputs	
Reset	**A**	**B**	**Q**	**$\overline{Q}$**
H	↗	H	⎍	⎏
H	L	↘	⎍	⎏
H	↗ ↘	L	Not Triggered	
H	H	↗ ↘	Not Triggered	
H	L, H, ↘	H	Not Triggered	
H	L	L, H, ↗	Not Triggered	
L	X	X	L	H
↘ ↗	X	X	Not Triggered	

Share Feedback
Your Opinion Matters

ELECTRICAL CHARACTERISTICS (Voltages Referenced to V_{SS})

Characteristic	Symbol	V_{DD} Vdc	−55 °C Min	−55 °C Max	25 °C Min	25 °C Typ (Note 2)	25 °C Max	125 °C Min	125 °C Max	Unit
Output Voltage "0" Level $V_{in} = V_{DD}$ or 0	V_{OL}	5.0	–	0.05	–	0	0.05	–	0.05	Vdc
		10	–	0.05	–	0	0.05	–	0.05	
		15	–	0.05	–	0	0.05	–	0.05	
"1" Level $V_{in} = 0$ or V_{DD}	V_{OH}	5.0	4.95	–	4.95	5.0	–	4.95	–	Vdc
		10	9.95	–	9.95	10	–	9.95	–	
		15	14.95	–	14.95	15	–	14.95	–	
Input Voltage "0" Level	V_{IL}									Vdc
(V_O = 4.5 or 0.5 Vdc)		5.0	–	1.5	–	2.25	1.5	–	1.5	
(V_O = 9.0 or 1.0 Vdc)		10	–	3.0	–	4.50	3.0	–	3.0	
(V_O = 13.5 or 1.5 Vdc)		15	–	4.0	–	6.75	4.0	–	4.0	
"1" Level	V_{IH}									Vdc
(V_O = 0.5 or 4.5 Vdc)		5.0	3.5	–	3.5	2.75	–	3.5	–	
(V_O = 1.0 or 9.0 Vdc)		10	7.0	–	7.0	5.50	–	7.0	–	
(V_O = 1.5 or 13.5 Vdc)		15	11	–	11	8.25	–	11	–	
Output Drive Current	I_{OH}									mAdc
(V_{OH} = 2.5 Vdc) Source		5.0	–1.2	–	–1.0	–1.7	–	–0.7	–	
(V_{OH} = 4.6 Vdc)		5.0	–0.64	–	–0.51	–0.88	–	–0.36	–	
(V_{OH} = 9.5 Vdc)		10	–1.6	–	–1.3	–2.25	–	–0.9	–	
(V_{OH} = 13.5 Vdc)		15	–4.2	–	–3.4	–8.8	–	–2.4	–	
(V_{OL} = 0.4 Vdc) Sink	I_{OL}	5.0	0.64	–	0.51	0.88	–	0.36	–	mAdc
(V_{OL} = 0.5 Vdc)		10	1.6	–	1.3	2.25	–	0.9	–	
(V_{OL} = 1.5 Vdc)		15	4.2	–	3.4	8.8	–	2.4	–	
Input Current	I_{in}	15	–	±0.1	–	±0.00001	±0.1	–	±1.0	μAdc
Input Capacitance (V_{in} = 0)	C_{in}	–	–	–	–	5.0	7.5	–	–	pF
Quiescent Current (Per Package)	I_{DD}	5.0	–	5.0	–	0.005	5.0	–	150	μAdc
		10	–	10	–	0.010	10	–	300	
		15	–	20	–	0.015	20	–	600	
Total Supply Current at an external load Capacitance (C_L) and at external timing capacitance (C_X), use the formula. (Note 3)	I_T	–	$I_T(C_L, C_X) = [(C_L + 0.36C_X)V_{DD}f + 2x10^{-8} R_XC_X(V_{DD}^{-2})^2f] \times 10^{-3}$ where: I_T in μA (per circuit), C_L and C_X in pF, R_X in megohms, V_{DD} in Vdc, f in kHz is input frequency.							μAdc

Product parametric performance is indicated in the Electrical Characteristics for the listed test conditions, unless otherwise noted. Product performance may not be indicated by the Electrical Characteristics if operated under different conditions.

2. Data labelled "Typ" is not to be used for design purposes but is intended as an indication of the IC's potential performance.
3. The formulas given are for the typical characteristics only at 25 °C.

Share Feedback
Your Opinion Matters

SWITCHING CHARACTERISTICS (C_L = 50 pF, T_A = 25 °C) (Note 4)

Characteristic	Symbol	C_X pF	R_X kΩ	V_{DD} Vdc	Min	Typ (Note 5)	Max	Unit
Output Rise and Fall Time t_{TLH}, t_{THL} = (1.5 ns/pF) C_L + 25 ns t_{TLH}, t_{THL} = (0.75 ns/pF) C_L + 12.5 ns t_{TLH}, t_{THL} = (0.55 ns/pF) C_L + 9.5 ns	t_{TLH}, t_{THL}	–	–	5.0 10 15	– – –	100 50 40	200 100 80	ns
Turn−Off, Turn−On Delay Time — A or B to Q or $\overline{Q}$ t_{PLH}, t_{PHL} = (1.7 ns/pF) C_L + 240 ns t_{PLH}, t_{PHL} = (0.66 ns/pF) C_L + 87 ns t_{PLH}, t_{PHL} = (0.5 ns/pF) C_L + 65 ns	t_{PLH}, t_{PHL}	15	5.0	5.0 10 15	– – –	325 120 90	650 240 180	ns
Turn−Off, Turn−On Delay Time — A or B to Q or $\overline{Q}$ t_{PLH}, t_{PHL} = (1.7 ns/pF) C_L + 620 ns t_{PLH}, t_{PHL} = (0.66 ns/pF) C_L + 257 ns t_{PLH}, t_{PHL} = (0.5 ns/pF) C_L + 185 ns	t_{PLH}, t_{PHL}	1000	10	5.0 10 15	– – –	705 290 210	– – –	ns
Input Pulse Width — A or B	t_{WH}	15	5.0	5.0 10 15	150 75 55	70 30 30	– – –	ns
	t_{WL}	1000	10	5.0 10 15	– – –	70 30 30	– – –	ns
Output Pulse Width — Q or $\overline{Q}$ (For C_X < 0.01 μF use graph for appropriate V_{DD} level.)	t_W	15	5.0	5.0 10 15	– – –	550 350 300	– – –	ns
Output Pulse Width — Q or $\overline{Q}$ (For C_X > 0.01 μF use formula: $t_W = 0.2\ R_X\ C_X\ \mathrm{Ln}\ [V_{DD} - V_{SS}]$) (Note 6)	t_W	10,000	10	5.0 10 15	15 10 15	30 50 55	45 90 95	μs
Pulse Width Match between Circuits in the same package	t1 – t2	10,000	10	5.0 10 15	– – –	6.0 8.0 8.0	25 35 35	%
Reset Propagation Delay — $\overline{\text{Reset}}$ to Q or $\overline{Q}$	t_{PLH}, t_{PHL}	15	5.0	5.0 10 15	– – –	325 90 60	600 225 170	ns
		1000	10	5.0 10 15	– – –	1000 300 250	– – –	ns
Retrigger Time	t_{rr}	15	5.0	5.0 10 15	0 0 0	– – –	– – –	ns
		1000	10	5.0 10 15	0 0 0	– – –	– – –	ns
External Timing Resistance	R_X	–	–	–	5.0	–	1000	kΩ
External Timing Capacitance	C_X	–	–	–	No Limits (Note 7)			μF

4. The formulas given are for the typical characteristics only at 25 °C.
5. Data labelled “Typ” is not to be used for design purposes but is intended as an indication of the IC’s potential performance.
6. If C_X > 15 μF, Use Discharge Protection Diode D_X, per Figure 9.
7. $R_X$is in Ω, C_X is in farads, V_{DD} and V_{SS} in volts, PW_{out} in seconds.

Share Feedback
Your Opinion Matters

ORDERING INFORMATION

Device	Package	Shipping†
MC14528BDG	SOIC-16 (Pb-Free)	48 Units / Rail
MC14528BDR2G	SOIC-16 (Pb-Free)	2500 / Tape & Reel
NLV14528BDR2G*	SOIC-16 (Pb-Free)	2500 / Tape & Reel

† For information on tape and reel specifications, including part orientation and tape sizes, please refer to our Tape and Reel Packaging Specifications Brochure, BRD8011/D.

* NLV Prefix for Automotive and Other Applications Requiring Unique Site and Control Change Requirements; AEC-Q100 Qualified and PPAP Capable.

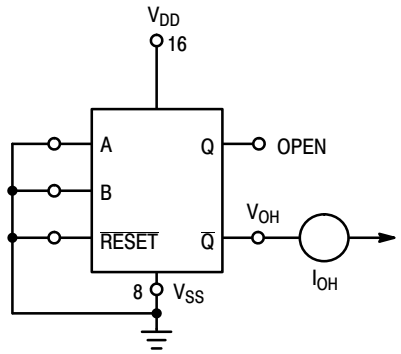

Figure 1. Output Source Current Test Circuit

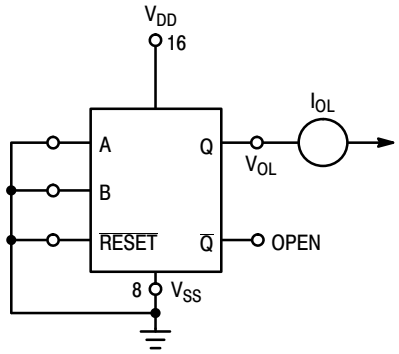

Figure 2. Output Sink Current Test Circuit

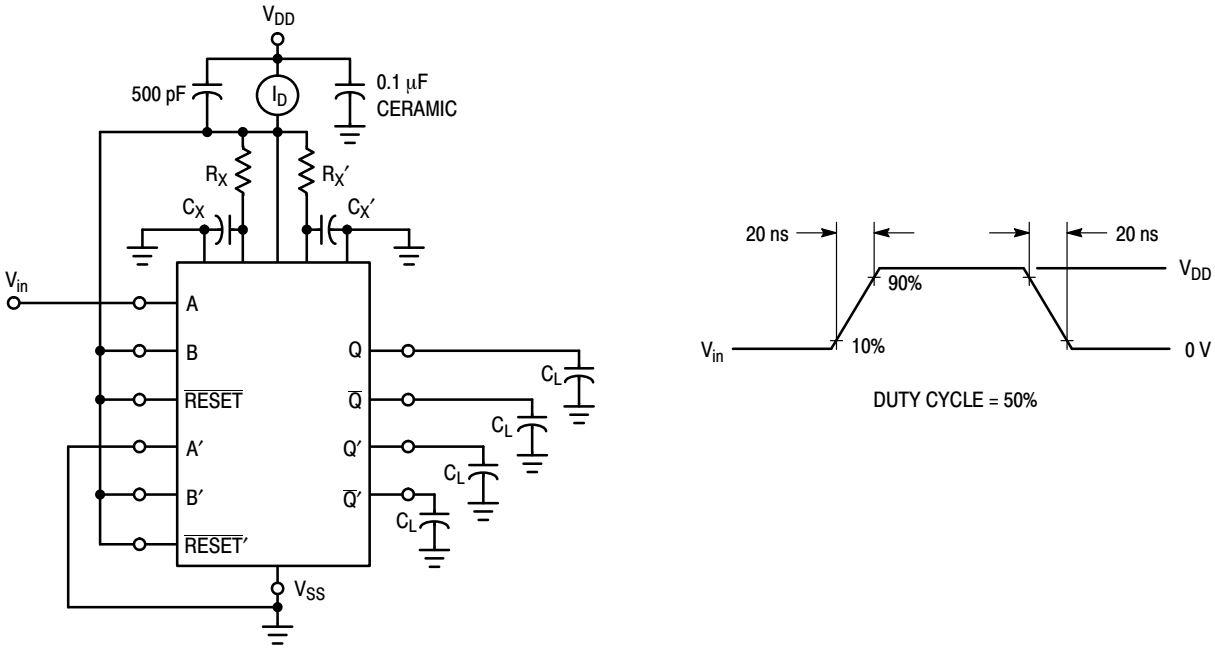

Figure 3. Power Dissipation Test Circuit and Waveforms

Share Feedback
Your Opinion Matters

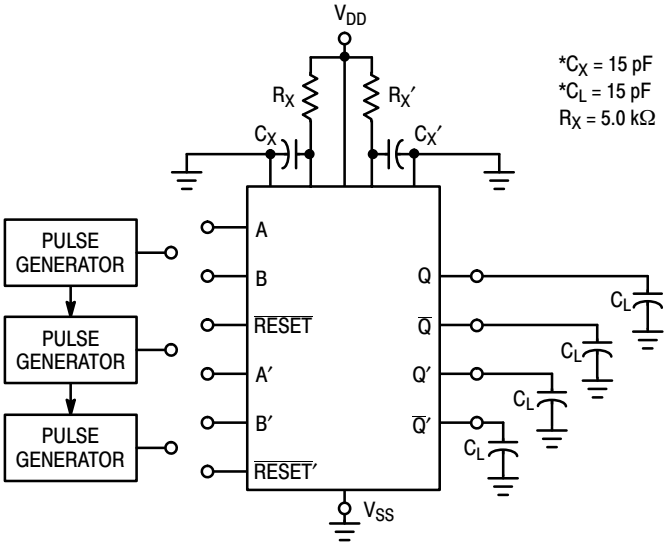

INPUT CONNECTIONS

Characteristics	$\overline{\text{Reset}}$	A	B
t_{PLH}, t_{PHL}, t_{TLH}, t_{THL}, t_W	V_{DD}	PG1	V_{DD}
t_{PLH}, t_{PHL}, t_{TLH}, t_{THL}, t_W	V_{DD}	V_{SS}	PG2
$t_{PLH(R)}$, $t_{PHL(R)}$, t_W	PG3	PG1	PG2

* Includes capacitance of probes, wiring, and fixture parasitic.

AC test waveforms for PG1, PG2, and PG3 on next page.

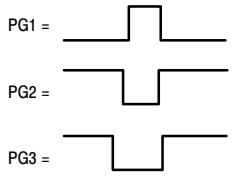

Figure 4. AC Test Circuit

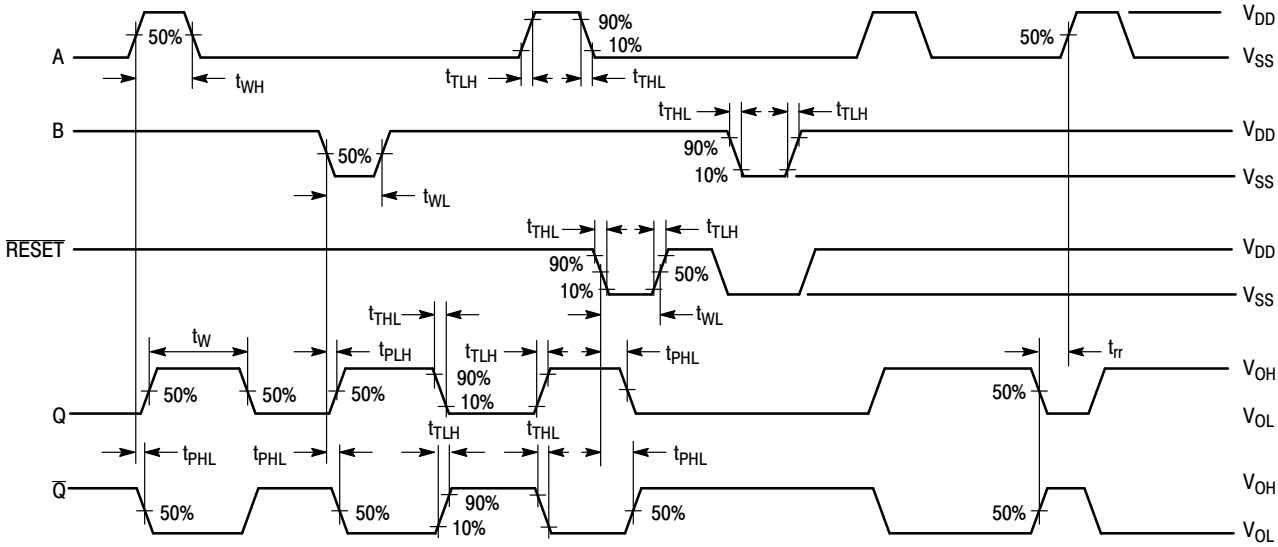

Figure 5. AC Test Waveforms

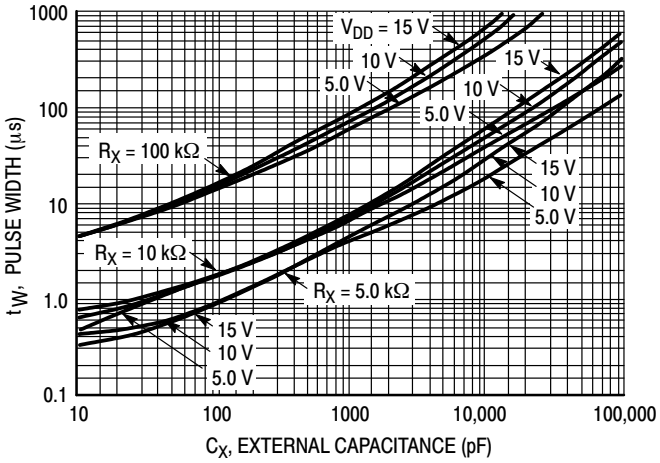

Figure 6. Pulse Width versus C_X

Share Feedback
Your Opinion Matters

TYPICAL APPLICATIONS

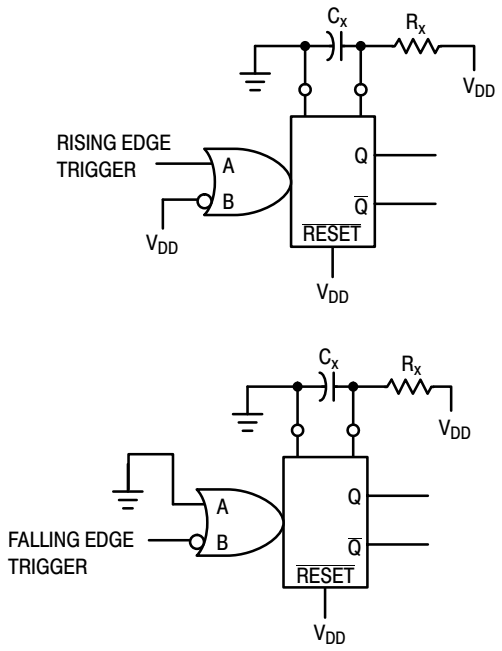

Figure 7. Retriggerable Monostables Circuitry

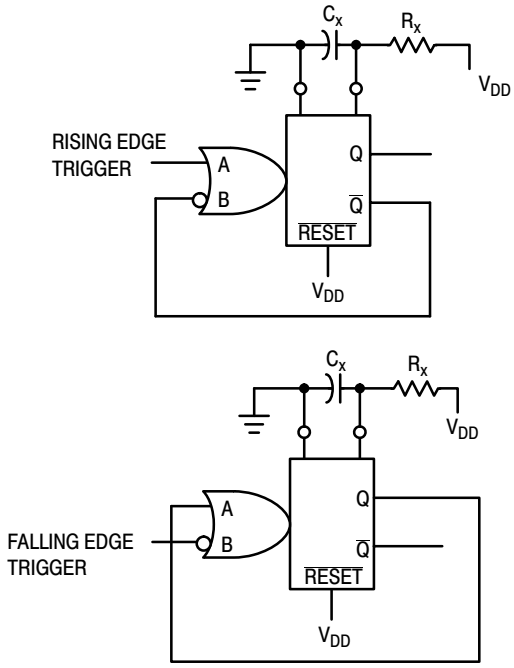

Figure 8. Non-Retriggerable Monostables Circuitry

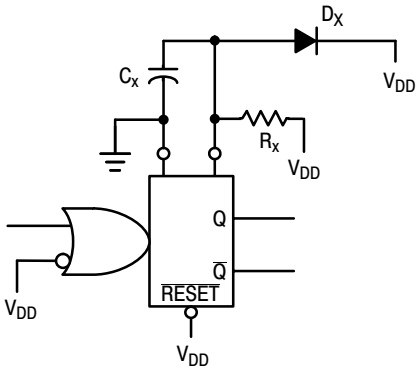

Figure 9. Use of a Diode to Limit Power Down Current Surge

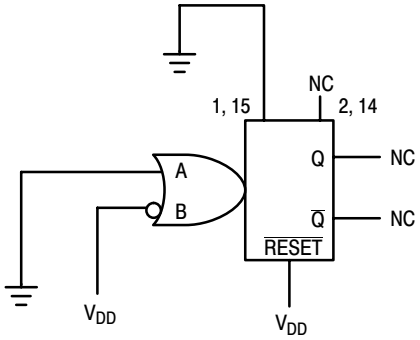

Figure 10. Connection of Unused Sections

Share Feedback
Your Opinion Matters

REVISION HISTORY

Revision	Description of Changes	Date
10	Rebranded the Data Sheet to **onsemi** format.	10/3/2025

This document has undergone updates prior to the inclusion of this revision history table. The changes tracked here only reflect updates made on the noted approval dates.

ECLinPSis trademark of Semiconductor Components Industries, LLC dba “**onsemi**” or its affiliates and/or subsidiaries in the United States and/or other countries.

Share Feedback
Your Opinion Matters

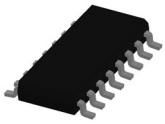

SOIC−16 9.90x3.90x1.37 1.27P
CASE 751B
ISSUE M

DATE 18 OCT 2024

NOTES:
1. DIMENSIONING AND TOLERANCING PER ASME Y14.5M, 2018.
2. DIMENSION IN MILLIMETERS. ANGLE IN DEGREES.
3. DIMENSIONS D AND E1 DO NOT INCLUDE MOLD PROTRUSION.
4. MAXIMUM MOLD PROTRUSION 0.15mm PER SIDE.
5. DIMENSION b DOES NOT INCLUDE DAMBAR PROTRUSION. ALLOWABLE DAMBAR PROTRUSION SHALL BE 0.127mm TOTAL IN EXCESS OF THE b DIMENSION AT MAXIMUM MATERIAL CONDITION.

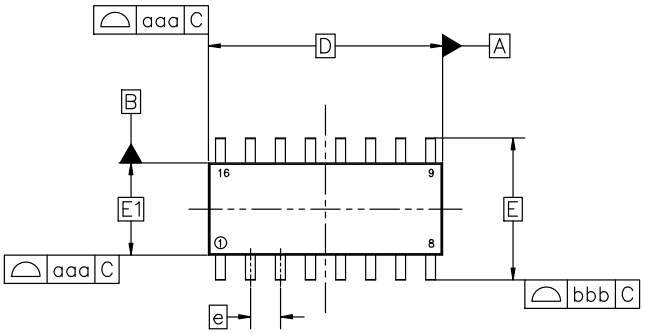

TOP VIEW

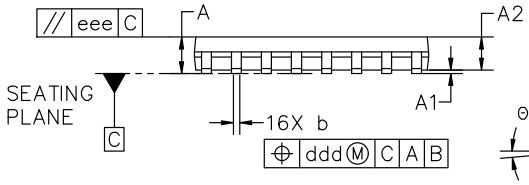

SIDE VIEW

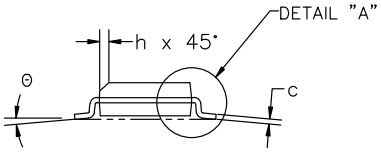

END VIEW

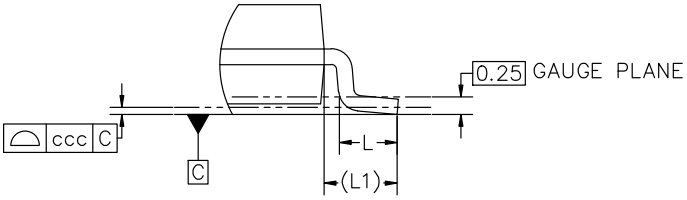

DETAIL "A"
Scale 3:1

MILLIMETERS			
DIM	MIN	NOM	MAX
A	1.35	1.55	1.75
A1	0.10	0.18	0.25
A2	1.25	1.37	1.50
b	0.35	0.42	0.49
c	0.19	0.22	0.25
D	9.90 BSC		
E	6.00 BSC		
E1	3.90 BSC		
e	1.27 BSC		
h	0.25	---	0.50
L	0.40	0.83	1.25
L1	1.05 REF		
Θ	0°	---	7°
TOLERANCE OF FORM AND POSITION			
aaa	0.10		
bbb	0.20		
ccc	0.10		
ddd	0.25		
eee	0.10		

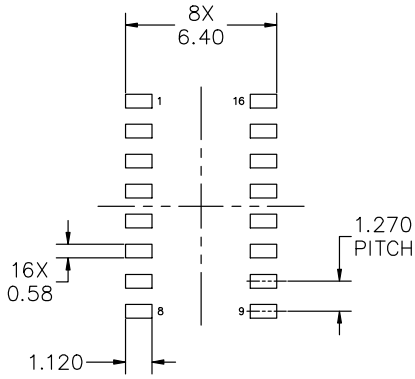

RECOMMENDED MOUNTING FOOTPRINT

*FOR ADDITIONAL INFORMATION ON OUR PB−FREE STRATEGY AND SOLDERING DETAILS, PLEASE DOWNLOAD THE onsemi SOLDERING AND MOUNTING TECHNIQUES REFERENCE MANUAL, SOLDERRM/D

DOCUMENT NUMBER:	98ASB42566B	Electronic versions are uncontrolled except when accessed directly from the Document Repository. Printed versions are uncontrolled except when stamped "CONTROLLED COPY" in red.
DESCRIPTION:	SOIC−16 9.90X3.90X1.37 1.27P	PAGE 1 OF 2

onsemi and onsemi are trademarks of Semiconductor Components Industries, LLC dba **onsemi** or its subsidiaries in the United States and/or other countries. **onsemi** reserves the right to make changes without further notice to any products herein. **onsemi** makes no warranty, representation or guarantee regarding the suitability of its products for any particular purpose, nor does **onsemi** assume any liability arising out of the application or use of any product or circuit, and specifically disclaims any and all liability, including without limitation special, consequential or incidental damages. **onsemi** does not convey any license under its patent rights nor the rights of others.

SOIC−16 9.90x3.90x1.37 1.27P
CASE 751B
ISSUE M

DATE 18 OCT 2024

GENERIC MARKING DIAGRAM*

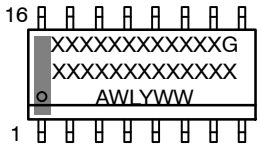

XXXXX = Specific Device Code
A = Assembly Location
WL = Wafer Lot
Y = Year
WW = Work Week
G = Pb−Free Package

*This information is generic. Please refer to device data sheet for actual part marking. Pb−Free indicator, “G” or microdot “▪”, may or may not be present. Some products may not follow the Generic Marking.

STYLE 1:

PIN 1.	COLLECTOR
2.	BASE
3.	EMITTER
4.	NO CONNECTION
5.	EMITTER
6.	BASE
7.	COLLECTOR
8.	COLLECTOR
9.	BASE
10.	EMITTER
11.	NO CONNECTION
12.	EMITTER
13.	BASE
14.	COLLECTOR
15.	EMITTER
16.	COLLECTOR

STYLE 2:

PIN 1.	CATHODE
2.	ANODE
3.	NO CONNECTION
4.	CATHODE
5.	CATHODE
6.	NO CONNECTION
7.	ANODE
8.	CATHODE
9.	CATHODE
10.	ANODE
11.	NO CONNECTION
12.	CATHODE
13.	CATHODE
14.	NO CONNECTION
15.	ANODE
16.	CATHODE

STYLE 3:

PIN 1.	COLLECTOR, DYE #1
2.	BASE, #1
3.	EMITTER, #1
4.	COLLECTOR, #1
5.	COLLECTOR, #2
6.	BASE, #2
7.	EMITTER, #2
8.	COLLECTOR, #2
9.	COLLECTOR, #3
10.	BASE, #3
11.	EMITTER, #3
12.	COLLECTOR, #3
13.	COLLECTOR, #4
14.	BASE, #4
15.	EMITTER, #4
16.	COLLECTOR, #4

STYLE 4:

PIN 1.	COLLECTOR, DYE #1
2.	COLLECTOR, #1
3.	COLLECTOR, #2
4.	COLLECTOR, #2
5.	COLLECTOR, #3
6.	COLLECTOR, #3
7.	COLLECTOR, #4
8.	COLLECTOR, #4
9.	BASE, #4
10.	EMITTER, #4
11.	BASE, #3
12.	EMITTER, #3
13.	BASE, #2
14.	EMITTER, #2
15.	BASE, #1
16.	EMITTER, #1

STYLE 5:

PIN 1.	DRAIN, DYE #1
2.	DRAIN, #1
3.	DRAIN, #2
4.	DRAIN, #2
5.	DRAIN, #3
6.	DRAIN, #3
7.	DRAIN, #4
8.	DRAIN, #4
9.	GATE, #4
10.	SOURCE, #4
11.	GATE, #3
12.	SOURCE, #3
13.	GATE, #2
14.	SOURCE, #2
15.	GATE, #1
16.	SOURCE, #1

STYLE 6:

PIN 1.	CATHODE
2.	CATHODE
3.	CATHODE
4.	CATHODE
5.	CATHODE
6.	CATHODE
7.	CATHODE
8.	CATHODE
9.	ANODE
10.	ANODE
11.	ANODE
12.	ANODE
13.	ANODE
14.	ANODE
15.	ANODE
16.	ANODE

STYLE 7:

PIN 1.	SOURCE N-CH
2.	COMMON DRAIN (OUTPUT)
3.	COMMON DRAIN (OUTPUT)
4.	GATE P-CH
5.	COMMON DRAIN (OUTPUT)
6.	COMMON DRAIN (OUTPUT)
7.	COMMON DRAIN (OUTPUT)
8.	SOURCE P-CH
9.	SOURCE P-CH
10.	COMMON DRAIN (OUTPUT)
11.	COMMON DRAIN (OUTPUT)
12.	COMMON DRAIN (OUTPUT)
13.	GATE N-CH
14.	COMMON DRAIN (OUTPUT)
15.	COMMON DRAIN (OUTPUT)
16.	SOURCE N-CH

onsemi and onsemi are trademarks of Semiconductor Components Industries, LLC dba **onsemi** or its subsidiaries in the United States and/or other countries. **onsemi** reserves the right to make changes without further notice to any products herein. **onsemi** makes no warranty, representation or guarantee regarding the suitability of its products for any particular purpose, nor does **onsemi** assume any liability arising out of the application or use of any product or circuit, and specifically disclaims any and all liability, including without limitation special, consequential or incidental damages. **onsemi** does not convey any license under its patent rights nor the rights of others.

© Semiconductor Components Industries, LLC, 2019

onsemi, onsemi, and other names, marks, and brands are registered and/or common law trademarks of Semiconductor Components Industries, LLC dba "**onsemi**" or its affiliates and/or subsidiaries in the United States and/or other countries. **onsemi** owns the rights to a number of patents, trademarks, copyrights, trade secrets, and other intellectual property. A listing of **onsemi**'s product/patent coverage may be accessed at www.onsemi.com/site/pdf/Patent−Marking.pdf. **onsemi** reserves the right to make changes at any time to any products or information herein, without notice. The information herein is provided "as−is" and **onsemi** makes no warranty, representation or guarantee regarding the accuracy of the information, product features, availability, functionality, or suitability of its products for any particular purpose, nor does **onsemi** assume any liability arising out of the application or use of any product or circuit, and specifically disclaims any and all liability, including without limitation special, consequential or incidental damages. Buyer is responsible for its products and applications using **onsemi** products, including compliance with all laws, regulations and safety requirements or standards, regardless of any support or applications information provided by **onsemi**. "Typical" parameters which may be provided in **onsemi** data sheets and/or specifications can and do vary in different applications and actual performance may vary over time. All operating parameters, including "Typicals" must be validated for each customer application by customer's technical experts. **onsemi** does not convey any license under any of its intellectual property rights nor the rights of others. **onsemi** products are not designed, intended, or authorized for use as a critical component in life support systems or any FDA Class 3 medical devices or medical devices with a same or similar classification in a foreign jurisdiction or any devices intended for implantation in the human body. Should Buyer purchase or use **onsemi** products for any such unintended or unauthorized application, Buyer shall indemnify and hold **onsemi** and its officers, employees, subsidiaries, affiliates, and distributors harmless against all claims, costs, damages, and expenses, and reasonable attorney fees arising out of, directly or indirectly, any claim of personal injury or death associated with such unintended or unauthorized use, even if such claim alleges that **onsemi** was negligent regarding the design or manufacture of the part. **onsemi** is an Equal Opportunity/Affirmative Action Employer. This literature is subject to all applicable copyright laws and is not for resale in any manner.

ADDITIONAL INFORMATION

TECHNICAL PUBLICATIONS:
Technical Library: www.onsemi.com/design/resources/technical−documentation
onsemi Website: www.onsemi.com

ONLINE SUPPORT: www.onsemi.com/support
For additional information, please contact your local Sales Representative at
www.onsemi.com/support/sales