Quad Analog Switch/Quad Multiplexer

MC14066B

SOIC-14
D SUFFIX
CASE 751A

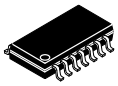

SOEIAJ-14
F SUFFIX
CASE 965

TSSOP-14
DT SUFFIX
CASE 948G

The MC14066B consists of four independent switches capable of controlling either digital or analog signals. This quad bilateral switch is useful in signal gating, chopper, modulator, demodulator and CMOS logic implementation.

The MC14066B is designed to be pin-for-pin compatible with the MC14016B, but has much lower ON resistance. Input voltage swings as large as the full supply voltage can be controlled via each independent control input.

Features

- Triple Diode Protection on All Control Inputs
- Supply Voltage Range = 3.0 Vdc to 18 Vdc
- Linearized Transfer Characteristics
- Low Noise − 12 nV/$\sqrt{\text{Cycle}}$, f ≥ 1.0 kHz typical
- Pin-for-Pin Replacement for CD4016, CD4016, MC14016B
- For Lower R_{ON}, Use The HC4066 High-Speed CMOS Device
- NLV Prefix for Automotive and Other Applications Requiring Unique Site and Control Change Requirements; AEC-Q100 Qualified and PPAP Capable
- These Devices are Pb-Free and are RoHS Compliant

MAXIMUM RATINGS (Voltages Referenced to V_{SS})

Symbol	Parameter	Value	Unit
V_{DD}	DC Supply Voltage Range	−0.5 to +18.0	V
V_{in}, V_{out}	Input or Output Voltage Range (DC or Transient)	−0.5 to V_{DD} + 0.5	V
I_{in}	Input Current (DC or Transient) per Control Pin	±10	mA
I_{SW}	Switch Through Current	±25	mA
P_D	Power Dissipation, per Package (Note 1)	500	mW
T_A	Ambient Temperature Range	−55 to +125	°C
T_{stg}	Storage Temperature Range	−65 to +150	°C
T_L	Lead Temperature (8-Second Soldering)	260	°C

Stresses exceeding those listed in the Maximum Ratings table may damage the device. If any of these limits are exceeded, device functionality should not be assumed, damage may occur and reliability may be affected.

1. Temperature Derating: “D/DW” Packages: –7.0 mW/°C From 65 °C To 125 °C

This device contains protection circuitry to guard against damage due to high static voltages or electric fields. However, precautions must be taken to avoid applications of any voltage higher than maximum rated voltages to this high-impedance circuit. For proper operation, V_{in} and V_{out} should be constrained to the range $V_{SS} \le (V_{in}$ or $V_{out}) \le V_{DD}$.

Unused inputs must always be tied to an appropriate logic voltage level (e.g., either V_{SS} or V_{DD}). Unused outputs must be left open.

PIN ASSIGNMENT

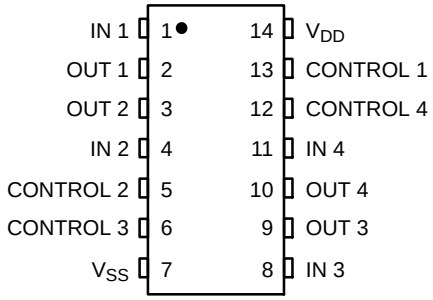

MARKING DIAGRAMS

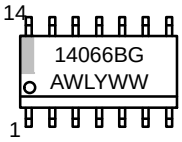

SOIC-14

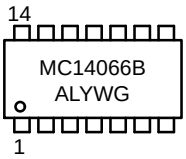

SOEIAJ-14

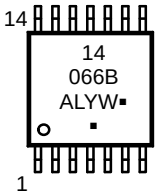

TSSOP-14

A	= Assembly Location
WL, L	= Wafer Lot
YY, Y	= Year
WW, W	= Work Week
G or ▪	= Pb-Free Package

(Note: Microdot may be in either location)

ORDERING INFORMATION

See detailed ordering and shipping information in the package dimensions section on page 8 of this data sheet.

NOTE: Some of the devices on this data sheet have been **DISCONTINUED**. Please refer to the table on page 8.

© Semiconductor Components Industries, LLC, 2011

BLOCK DIAGRAM

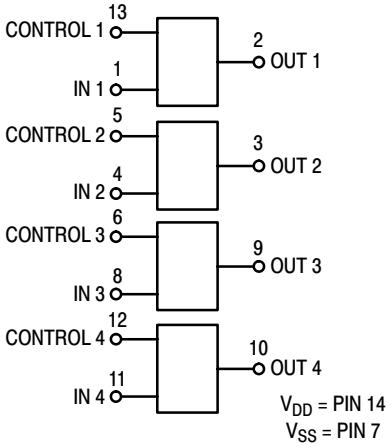

LOGIC DIAGRAM AND TRUTH TABLE

(1/4 OF DEVICE SHOWN)

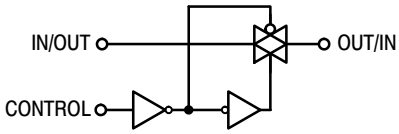

Control	Switch
0 = V_{SS}	OFF
1 = V_{DD}	ON

Logic Diagram Restrictions

$V_{SS} \le V_{in} \le V_{DD}$

$V_{SS} \le V_{out} \le V_{DD}$

CIRCUIT SCHEMATIC

(1/4 OF CIRCUIT SHOWN)

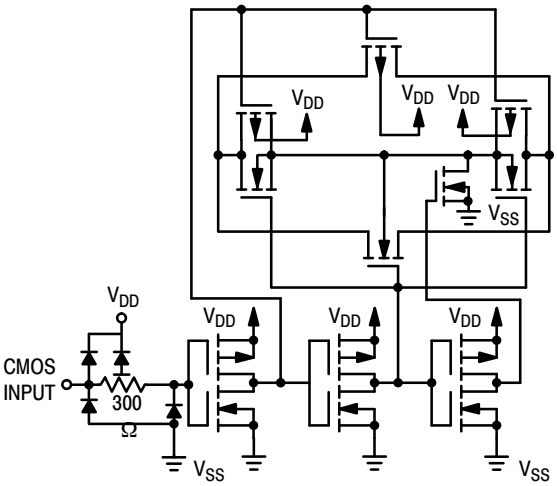

Share Feedback
Your Opinion Matters

ELECTRICAL CHARACTERISTICS

Characteristic	Symbol	V_{DD}	Test Conditions	−55 °C Min	−55 °C Max	25 °C Min	25 °C Typ (Note 2)	25 °C Max	125 °C Min	125 °C Max	Unit
SUPPLY REQUIREMENTS (Voltages Referenced to V_{EE})											
Power Supply Voltage Range	V_{DD}	—		3.0	18	3.0	–	18	3.0	18	V
Quiescent Current Per Package	I_{DD}	5.0 10 15	Control Inputs: $V_{in} = V_{SS}$ or V_{DD}, Switch I/O: $V_{SS} \leq V_{I/O} \leq V_{DD}$, and $\Delta V_{switch} \leq 500$ mV (3)	– – –	0.25 0.5 1.0	– – –	0.005 0.010 0.015	0.25 0.5 1.0	– – –	7.5 15 30	μA
Total Supply Current (Dynamic Plus Quiescent, Per Package	$I_{D(AV)}$	5.0 10 15	T_A = 25 °C only The channel component, $(V_{in} – V_{out})/R_{on}$, is not included.)	Typical			(0.07 μA/kHz) f + I_{DD} (0.20 μA/kHz) f + I_{DD} (0.36 μA/kHz) f + I_{DD}				μA
CONTROL INPUTS (Voltages Referenced to V_{SS})											
Low-Level Input Voltage	V_{IL}	5.0 10 15	R_{on} = per spec, I_{off} = per spec	– – –	1.5 3.0 4.0	– – –	2.25 4.50 6.75	1.5 3.0 4.0	– – –	1.5 3.0 4.0	V
High-Level Input Voltage	V_{IH}	5.0 10 15	R_{on} = per spec, I_{off} = per spec	3.5 7.0 11	– – –	3.5 7.0 11	2.75 5.50 8.25	– – –	3.5 7.0 11	– – –	V
Input Leakage Current	I_{in}	15	V_{in} = 0 or V_{DD}	–	±0.1	–	±0.00001	±0.1	–	±1.0	μA
Input Capacitance	C_{in}	–		–	–	–	5.0	7.5	–	–	pF
SWITCHES IN AND OUT (Voltages Referenced to V_{SS})											
Recommended Peak-to-Peak Voltage Into or Out of the Switch	$V_{I/O}$	–	Channel On or Off	0	V_{DD}	0	–	V_{DD}	0	V_{DD}	$V_{p–p}$
Recommended Static or Dynamic Voltage Across the Switch (Note 3) (Figure 1)	ΔV_{switch}	–	Channel On	0	600	0	–	600	0	300	mV
Output Offset Voltage	V_{OO}	–	V_{in} = 0 V, No Load	–	–	–	10	–	–	–	μV
ON Resistance	R_{on}	5.0 10 15	$\Delta V_{switch} \leq 500$ mV (3), $V_{in} = V_{IL}$ or V_{IH} (Control), and V_{in} = 0 to V_{DD} (Switch)	– – –	800 400 220	– – –	250 120 80	1050 500 280	– – –	1200 520 300	Ω
ΔON Resistance Between Any Two Channels in the Same Package	ΔR_{on}	5.0 10 15		– – –	70 50 45	– – –	25 10 10	70 50 45	– – –	135 95 65	Ω
Off-Channel Leakage Current (Figure 6)	I_{off}	15	$V_{in} = V_{IL}$ or V_{IH} (Control) Channel to Channel or Any One Channel	–	±100	–	±0.05	±100	–	±1000	nA
Capacitance, Switch I/O	$C_{I/O}$	–	Switch Off	–	–	–	10	15	–	–	pF
Capacitance, Feedthrough (Switch Off)	$C_{I/O}$	– –		–	–	–	0.47	–	–	–	pF

Product parametric performance is indicated in the Electrical Characteristics for the listed test conditions, unless otherwise noted. Product performance may not be indicated by the Electrical Characteristics if operated under different conditions.

2. Data labeled “Typ” is not to be used for design purposes, but is intended as an indication of the IC’s potential performance.
3. For voltage drops across the switch (ΔV_{switch}) > 600 mV (> 300 mV at high temperature), excessive V_{DD} current may be drawn; i.e. the current out of the switch may contain both V_{DD} and switch input components. The reliability of the device will be unaffected unless the Maximum Ratings are exceeded. (See first page of this data sheet.)

Share Feedback
Your Opinion Matters

ELECTRICAL CHARACTERISTICS (Note 4) (C_L = 50 pF, T_A = 25 °C unless otherwise noted.)

Characteristic	Symbol	V_{DD} Vdc	Min	Typ (Note 5)	Max	Unit
Propagation Delay Times V_{SS} = 0 Vdc Input to Output (R_L = 10 kΩ) t_{PLH}, t_{PHL} = (0.17 ns/pF) C_L + 15.5 ns t_{PLH}, t_{PHL} = (0.08 ns/pF) C_L + 6.0 ns t_{PLH}, t_{PHL} = (0.06 ns/pF) C_L + 4.0 ns	t_{PLH}, t_{PHL}	 5.0 10 15	 – – –	 20 10 7.0	 40 20 15	ns
Control to Output (R_L = 1 kΩ) (Figure 2) Output “1” to High Impedance	t_{PHZ}	 5.0 10 15	 – – –	 40 35 30	 80 70 60	ns
Output “0” to High Impedance	t_{PLZ}	5.0 10 15	– – –	40 35 30	80 70 60	ns
High Impedance to Output “1”	t_{PZH}	5.0 10 15	– – –	60 20 15	120 40 30	ns
High Impedance to Output “0”	t_{PZL}	5.0 10 15	– – –	60 20 15	120 40 30	ns
Second Harmonic Distortion V_{SS} = – 5 Vdc (V_{in} = 1.77 Vdc, RMS Centered @ 0.0 Vdc, R_L = 10 kΩ, f = 1.0 kHz)	–	5.0	–	0.1	–	%
Bandwidth (Switch ON) (Figure 3) V_{SS} = – 5 Vdc (R_L = 1 kΩ, 20 Log (V_{out}/V_{in}) = – 3 dB, C_L = 50 pF, V_{in} = 5 V_{p-p})	–	5.0	–	65	–	MHz
Feedthrough Attenuation (Switch OFF) V_{SS} = – 5 Vdc (V_{in} = 5 V_{p-p}, R_L = 1 kΩ, f_{in} = 1.0 MHz) (Figure 3)	–	5.0	–	– 50	–	dB
Channel Separation (Figure 4) V_{SS} = – 5 Vdc (V_{in} = 5 V_{p-p}, R_L = 1 kΩ, f_{in} = 8.0 MHz) (Switch A ON, Switch B OFF)	–	5.0	–	– 50	–	dB
Crosstalk, Control Input to Signal Output (Figure 5) V_{SS} = – 5 Vdc (R_1 = 1 kΩ, R_L = 10 kΩ, Control t_{TLH} = t_{THL} = 20 ns)	–	5.0	–	300	–	mV_{p-p}

Product parametric performance is indicated in the Electrical Characteristics for the listed test conditions, unless otherwise noted. Product performance may not be indicated by the Electrical Characteristics if operated under different conditions.

4. The formulas given are for the typical characteristics only at 25 °C.
5. Data labelled “Typ” is not to be used for design purposes but is intended as an indication of the IC’s potential performance.

Share Feedback
Your Opinion Matters

TEST CIRCUITS

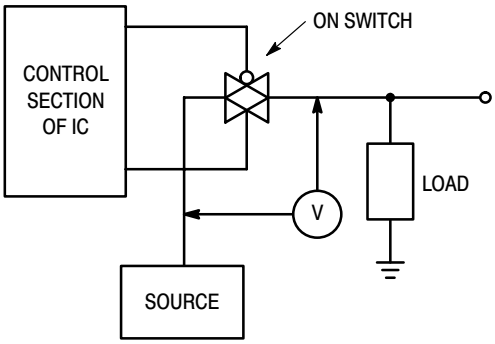

Figure 1. ΔV Across Switch

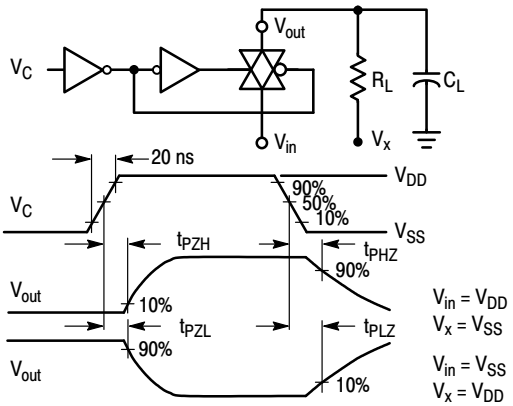

Figure 2. Turn-On Delay Time Test Circuit and Waveforms

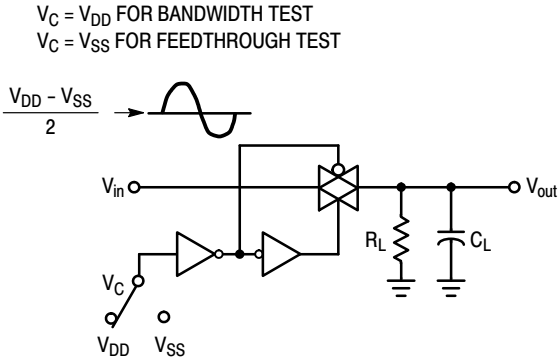

Figure 3. Bandwidth and Feedthrough Attenuation

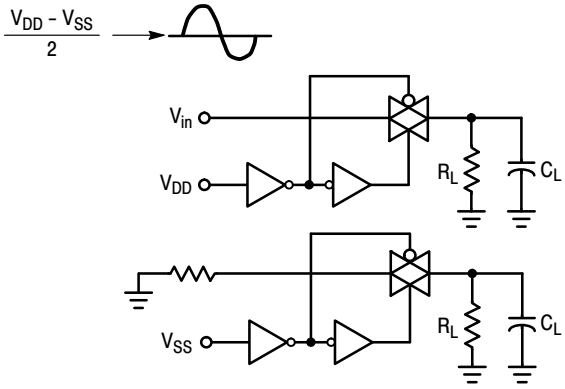

Figure 4. Channel Separation

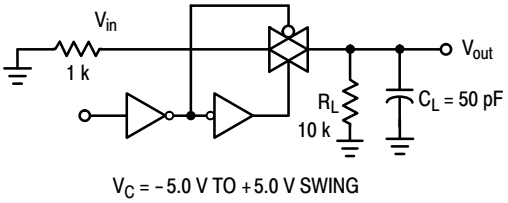

Figure 5. Crosstalk, Control to Output

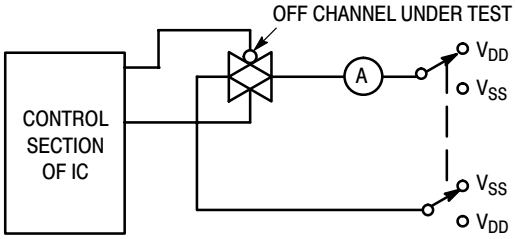

Figure 6. Off Channel Leakage

Share Feedback
Your Opinion Matters

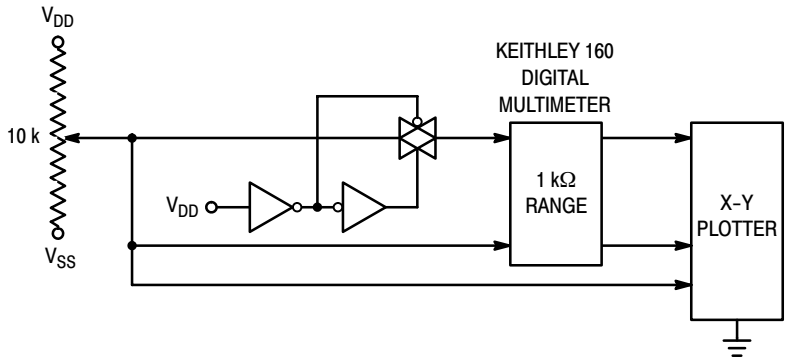

Figure 7. Channel Resistance (R_{ON}) Test Circuit

TYPICAL RESISTANCE CHARACTERISTICS

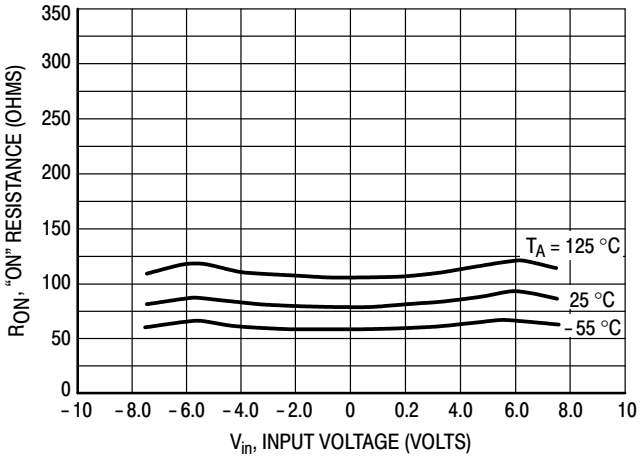

Figure 8. V_{DD} = 7.5 V, V_{SS} = − 7.5 V

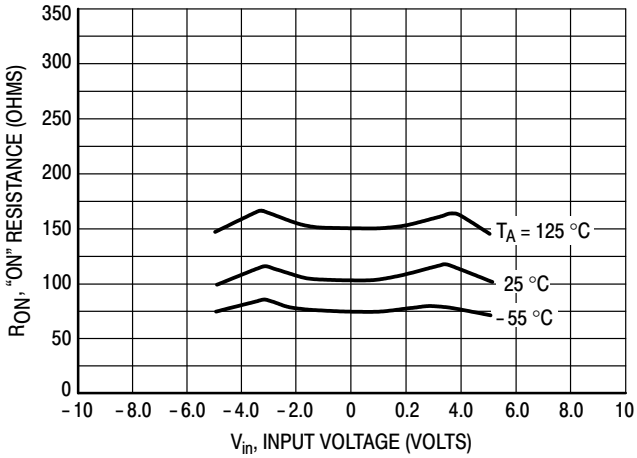

Figure 9. V_{DD} = 5.0 V, V_{SS} = − 5.0 V

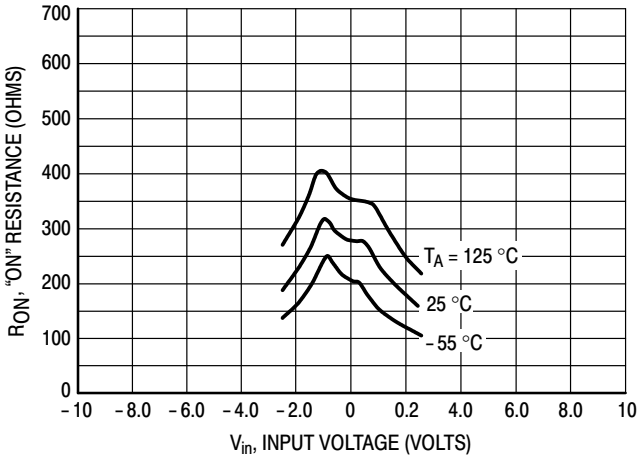

Figure 10. V_{DD} = 2.5 V, V_{SS} = − 2.5 V

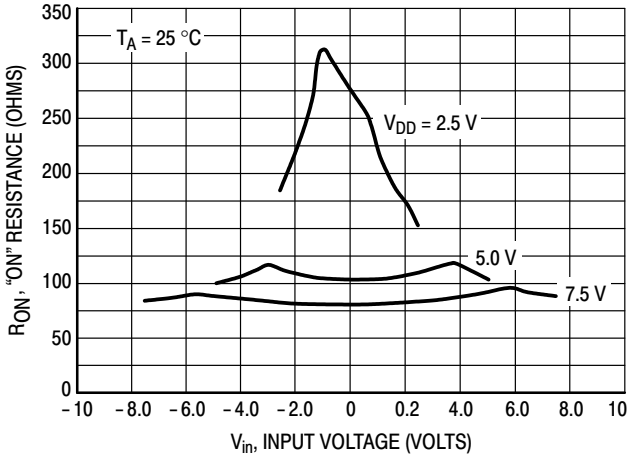

Figure 11. Comparison at 25 °C, V_{DD} = −V_{SS}

Share Feedback
Your Opinion Matters

APPLICATIONS INFORMATION

Figure A illustrates use of the Analog Switch. The 0-to-5 V digital control signal is used to directly control a 5 V peak-to-peak analog signal.

The digital control logic levels are determined by V_{DD} and V_{SS}. The V_{DD} voltage is the logic high voltage, the V_{SS} voltage is logic low. For the example, V_{DD} = +5 V = logic high at the control inputs; V_{SS} = GND = 0 V = logic low.

The maximum analog signal level is determined by V_{DD} and V_{SS}. The analog voltage must not swing higher than V_{DD} or lower than V_{SS}.

The example shows a 5 V peak-to-peak signal which allows no margin at either peak. If voltage transients above V_{DD} and/or below V_{SS} are anticipated on the analog channels, external diodes (D_x) are recommended as shown in Figure B. These diodes should be small signal types able to absorb the maximum anticipated current surges during clipping.

The *absolute* maximum potential difference between V_{DD} and V_{SS} is 18 V. Most parameters are specified up to 15 V which is the *recommended* maximum difference between V_{DD} and V_{SS}.

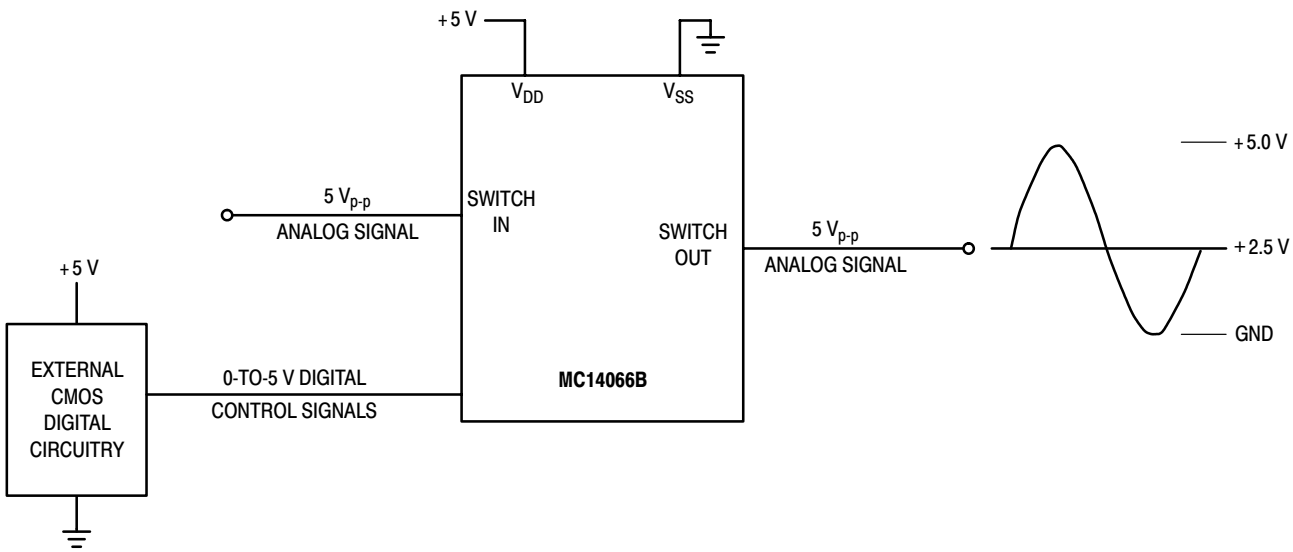

Figure A. Application Example

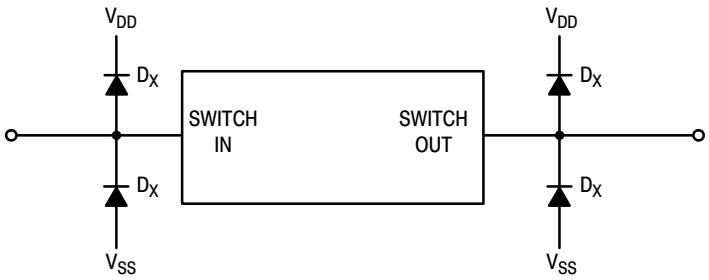

Figure B. External Germanium or Schottky Clipping Diodes

Share Feedback
Your Opinion Matters

ORDERING INFORMATION

Device	Package	Shipping†
MC14066BDG	SOIC-14 (Pb-Free)	55 Units / Rail
MC14066BDR2G	SOIC-14 (Pb-Free)	2500 / Tape & Reel
NLV14066BDR2G*	SOIC-14 (Pb-Free)	2500 / Tape & Reel
MC14066BDTR2G	TSSOP-14 (Pb-Free)	2500 / Tape & Reel
NLV14066BDTR2G*	TSSOP-14 (Pb-Free)	2500 / Tape & Reel

DISCONTINUED (Note 6)

NLV14066BDG*	SOIC-14 (Pb-Free)	55 Units / Rail
MC14066BFELG	SOEIAJ-14 (Pb-Free)	2000 / Tape & Reel

† For information on tape and reel specifications, including part orientation and tape sizes, please refer to our Tape and Reel Packaging Specifications Brochure, BRD8011/D.

* NLV Prefix for Automotive and Other Applications Requiring Unique Site and Control Change Requirements; AEC-Q100 Qualified and PPAP Capable.

6. **DISCONTINUED:** These devices are not recommended for new design. Please contact your **onsemi** representative for information. The most current information on these devices may be available on www.onsemi.com.

Share Feedback
Your Opinion Matters

REVISION HISTORY

Revision	Description of Changes	Date
11	Rebranded the Data Sheet to **onsemi** format. NLV14066BDG and MC14066BFELG OPN Marked as Discontinued.	8/26/2025

This document has undergone updates prior to the inclusion of this revision history table. The changes tracked here only reflect updates made on the noted approval dates.

Share Feedback
Your Opinion Matters

SOEIAJ−14
CASE 965−01
ISSUE B

DATE 29 FEB 2008

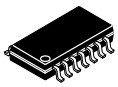

SCALE 1:1

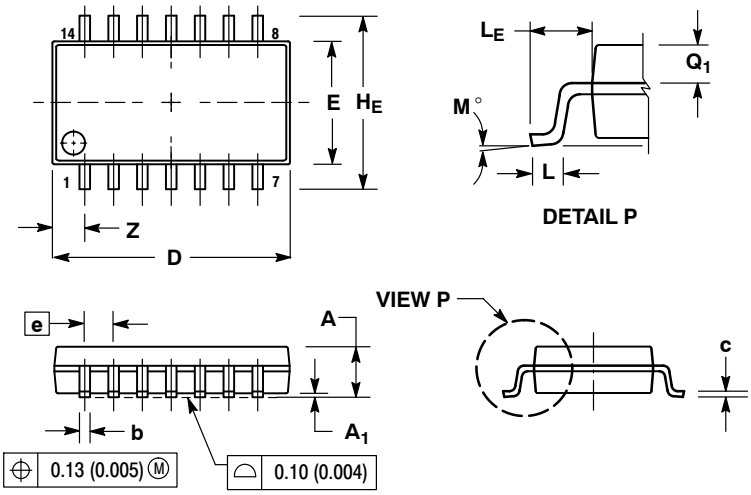

NOTES:
1. DIMENSIONING AND TOLERANCING PER ANSI Y14.5M, 1982.
2. CONTROLLING DIMENSION: MILLIMETER.
3. DIMENSIONS D AND E DO NOT INCLUDE MOLD FLASH OR PROTRUSIONS AND ARE MEASURED AT THE PARTING LINE. MOLD FLASH OR PROTRUSIONS SHALL NOT EXCEED 0.15 (0.006) PER SIDE.
4. TERMINAL NUMBERS ARE SHOWN FOR REFERENCE ONLY.
5. THE LEAD WIDTH DIMENSION (b) DOES NOT INCLUDE DAMBAR PROTRUSION. ALLOWABLE DAMBAR PROTRUSION SHALL BE 0.08 (0.003) TOTAL IN EXCESS OF THE LEAD WIDTH DIMENSION AT MAXIMUM MATERIAL CONDITION. DAMBAR CANNOT BE LOCATED ON THE LOWER RADIUS OR THE FOOT. MINIMUM SPACE BETWEEN PROTRUSIONS AND ADJACENT LEAD TO BE 0.46 (0.018).

	MILLIMETERS		INCHES	
DIM	MIN	MAX	MIN	MAX
A	---	2.05	---	0.081
A_1	0.05	0.20	0.002	0.008
b	0.35	0.50	0.014	0.020
c	0.10	0.20	0.004	0.008
D	9.90	10.50	0.390	0.413
E	5.10	5.45	0.201	0.215
e	1.27 BSC		0.050 BSC	
H_E	7.40	8.20	0.291	0.323
L	0.50	0.85	0.020	0.033
L_E	1.10	1.50	0.043	0.059
M	0 °	10 °	0 °	10 °
Q_1	0.70	0.90	0.028	0.035
Z	---	1.42	---	0.056

DOCUMENT NUMBER:	**98ASH70108A**	Electronic versions are uncontrolled except when accessed directly from the Document Repository. Printed versions are uncontrolled except when stamped "CONTROLLED COPY" in red.	
DESCRIPTION:	**14 LD SOEIAJ**		**PAGE 1 OF 1**

onsemi and onsemi are trademarks of Semiconductor Components Industries, LLC dba **onsemi** or its subsidiaries in the United States and/or other countries. **onsemi** reserves the right to make changes without further notice to any products herein. **onsemi** makes no warranty, representation or guarantee regarding the suitability of its products for any particular purpose, nor does **onsemi** assume any liability arising out of the application or use of any product or circuit, and specifically disclaims any and all liability, including without limitation special, consequential or incidental damages. **onsemi** does not convey any license under its patent rights nor the rights of others.

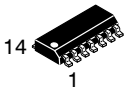

SCALE 1:1

SOIC−14 NB
CASE 751A−03
ISSUE L

DATE 03 FEB 2016

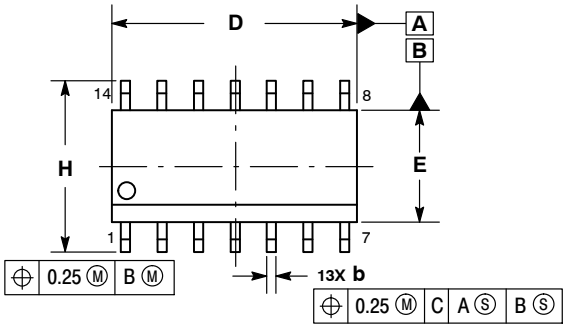

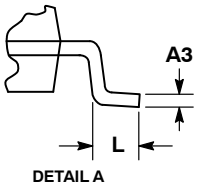

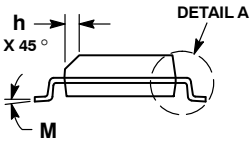

NOTES:
1. DIMENSIONING AND TOLERANCING PER ASME Y14.5M, 1994.
2. CONTROLLING DIMENSION: MILLIMETERS.
3. DIMENSION b DOES NOT INCLUDE DAMBAR PROTRUSION. ALLOWABLE PROTRUSION SHALL BE 0.13 TOTAL IN EXCESS OF AT MAXIMUM MATERIAL CONDITION.
4. DIMENSIONS D AND E DO NOT INCLUDE MOLD PROTRUSIONS.
5. MAXIMUM MOLD PROTRUSION 0.15 PER SIDE.

	MILLIMETERS		INCHES	
DIM	MIN	MAX	MIN	MAX
A	1.35	1.75	0.054	0.068
A1	0.10	0.25	0.004	0.010
A3	0.19	0.25	0.008	0.010
b	0.35	0.49	0.014	0.019
D	8.55	8.75	0.337	0.344
E	3.80	4.00	0.150	0.157
e	1.27 BSC		0.050 BSC	
H	5.80	6.20	0.228	0.244
h	0.25	0.50	0.010	0.019
L	0.40	1.25	0.016	0.049
M	0 °	7 °	0 °	7 °

SOLDERING FOOTPRINT*

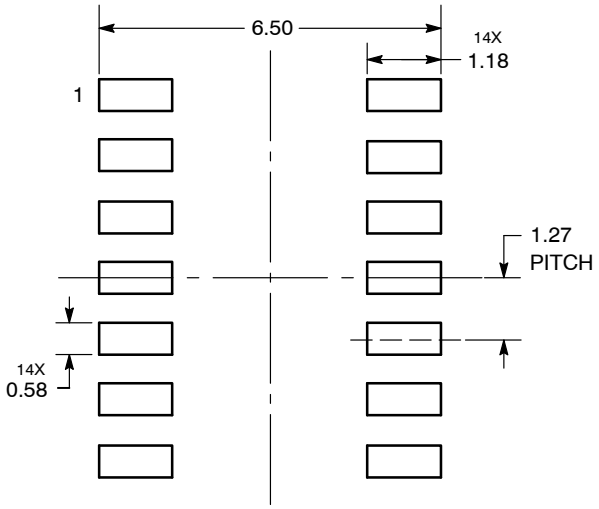

DIMENSIONS: MILLIMETERS

*For additional information on our Pb−Free strategy and soldering details, please download the **onsemi** Soldering and Mounting Techniques Reference Manual, SOLDERRM/D.

GENERIC MARKING DIAGRAM*

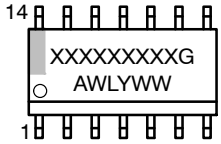

XXXXX	= Specific Device Code
A	= Assembly Location
WL	= Wafer Lot
Y	= Year
WW	= Work Week
G	= Pb−Free Package

*This information is generic. Please refer to device data sheet for actual part marking. Pb−Free indicator, “G” or microdot “▪”, may or may not be present. Some products may not follow the Generic Marking.

STYLES ON PAGE 2

DOCUMENT NUMBER:	98ASB42565B	Electronic versions are uncontrolled except when accessed directly from the Document Repository. Printed versions are uncontrolled except when stamped “CONTROLLED COPY” in red.
DESCRIPTION:	SOIC−14 NB	PAGE 1 OF 2

onsemi and onsemi are trademarks of Semiconductor Components Industries, LLC dba **onsemi** or its subsidiaries in the United States and/or other countries. **onsemi** reserves the right to make changes without further notice to any products herein. **onsemi** makes no warranty, representation or guarantee regarding the suitability of its products for any particular purpose, nor does **onsemi** assume any liability arising out of the application or use of any product or circuit, and specifically disclaims any and all liability, including without limitation special, consequential or incidental damages. **onsemi** does not convey any license under its patent rights nor the rights of others.

SOIC−14
CASE 751A−03
ISSUE L

DATE 03 FEB 2016

STYLE 1:
PIN 1. COMMON CATHODE
2. ANODE/CATHODE
3. ANODE/CATHODE
4. NO CONNECTION
5. ANODE/CATHODE
6. NO CONNECTION
7. ANODE/CATHODE
8. ANODE/CATHODE
9. ANODE/CATHODE
10. NO CONNECTION
11. ANODE/CATHODE
12. ANODE/CATHODE
13. NO CONNECTION
14. COMMON ANODE

STYLE 2:
CANCELLED

STYLE 3:
PIN 1. NO CONNECTION
2. ANODE
3. ANODE
4. NO CONNECTION
5. ANODE
6. NO CONNECTION
7. ANODE
8. ANODE
9. ANODE
10. NO CONNECTION
11. ANODE
12. ANODE
13. NO CONNECTION
14. COMMON CATHODE

STYLE 4:
PIN 1. NO CONNECTION
2. CATHODE
3. CATHODE
4. NO CONNECTION
5. CATHODE
6. NO CONNECTION
7. CATHODE
8. CATHODE
9. CATHODE
10. NO CONNECTION
11. CATHODE
12. CATHODE
13. NO CONNECTION
14. COMMON ANODE

STYLE 5:
PIN 1. COMMON CATHODE
2. ANODE/CATHODE
3. ANODE/CATHODE
4. ANODE/CATHODE
5. ANODE/CATHODE
6. NO CONNECTION
7. COMMON ANODE
8. COMMON CATHODE
9. ANODE/CATHODE
10. ANODE/CATHODE
11. ANODE/CATHODE
12. ANODE/CATHODE
13. NO CONNECTION
14. COMMON ANODE

STYLE 6:
PIN 1. CATHODE
2. CATHODE
3. CATHODE
4. CATHODE
5. CATHODE
6. CATHODE
7. CATHODE
8. ANODE
9. ANODE
10. ANODE
11. ANODE
12. ANODE
13. ANODE
14. ANODE

STYLE 7:
PIN 1. ANODE/CATHODE
2. COMMON ANODE
3. COMMON CATHODE
4. ANODE/CATHODE
5. ANODE/CATHODE
6. ANODE/CATHODE
7. ANODE/CATHODE
8. ANODE/CATHODE
9. ANODE/CATHODE
10. ANODE/CATHODE
11. COMMON CATHODE
12. COMMON ANODE
13. ANODE/CATHODE
14. ANODE/CATHODE

STYLE 8:
PIN 1. COMMON CATHODE
2. ANODE/CATHODE
3. ANODE/CATHODE
4. NO CONNECTION
5. ANODE/CATHODE
6. ANODE/CATHODE
7. COMMON ANODE
8. COMMON ANODE
9. ANODE/CATHODE
10. ANODE/CATHODE
11. NO CONNECTION
12. ANODE/CATHODE
13. ANODE/CATHODE
14. COMMON CATHODE

onsemi and onsemi are trademarks of Semiconductor Components Industries, LLC dba **onsemi** or its subsidiaries in the United States and/or other countries. **onsemi** reserves the right to make changes without further notice to any products herein. **onsemi** makes no warranty, representation or guarantee regarding the suitability of its products for any particular purpose, nor does **onsemi** assume any liability arising out of the application or use of any product or circuit, and specifically disclaims any and all liability, including without limitation special, consequential or incidental damages. **onsemi** does not convey any license under its patent rights nor the rights of others.

© Semiconductor Components Industries, LLC, 2019

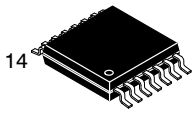

TSSOP−14 5.00x4.40x0.95, 0.65P
CASE 948G
ISSUE D

DATE 30 JUN 2026

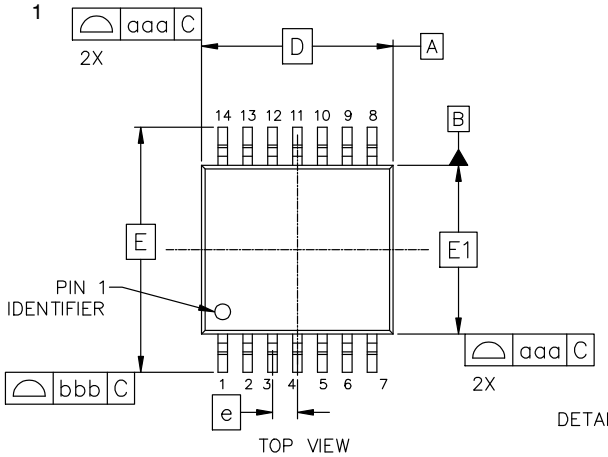

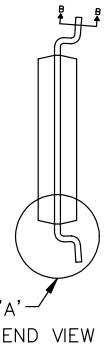

MILLIMETERS			
DIM	MIN	NOM	MAX
A	---	---	1.20
A1	0.05	0.10	0.15
A2	0.85	0.95	1.05
b	0.19	0.25	0.30
b1	0.19	0.22	0.25
c	0.09	0.15	0.20
c1	0.09	0.12	0.16
D	5.00 BSC		
E	6.40 BSC		
E1	4.40 BSC		
e	0.65 BSC		
L	0.50	0.63	0.75
L1	1.00 REF		
L2	0.25 BSC		
Θ	0°	4°	8°
TOLERANCE FORM & POSITION			
aaa	0.10		
bbb	0.15		
ccc	0.08		
ddd	0.10		
eee	0.10		

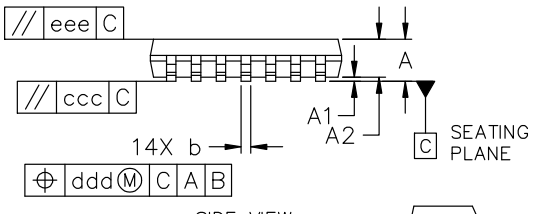

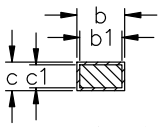

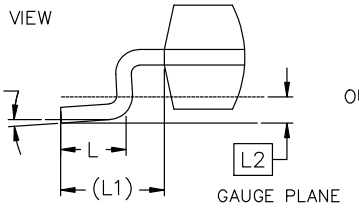

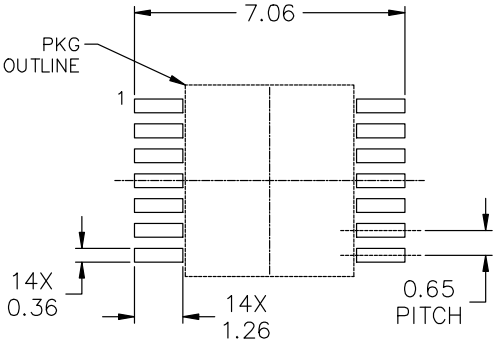

RECOMMENDED MOUNTING FOOTPRINT

*For additional information on our Pb−Free strategy and soldering details, please download the onsemi Soldering and Mounting Techniques Reference Manual, SOLDERRM/D.

NOTES:
1. DIMENSIONING AND TOLERANCING AS PER ASME Y14.5M, 2018.
2. CONTROLLING DIMENSION: MILLIMETER.
3. DIMENSION D DOES NOT INCLIDE MOLD FLASH, PROTRUSIONS OR GATE BURRS. MOLD FLASH OR GATE BURRS SHALL NOT EXCEED 0.15 PER SIDE.
4. DIMENSION E1 DOES NOT INCLUDE INTERLEAD FLASH OR PROTRUSION. INTERLEAD FLASH OR PROTRUSION SHALL NOT EXCEED 0.25 PER SIDE.
5. DIMENSION b DOES NOT INCLUDE DAMBAR PROTRUSION. ALLOWABLE DAMBAR PROTRUSION SHALL BE 0.08 TOTAL IN EXCESS OF THE b DIMENSION AT MAXIMUM MATERIAL CONDITION.
6. TERMINAL NUMBERS ARE SHOWN FOR REFERENCE ONLY.

GENERIC MARKING DIAGRAM*

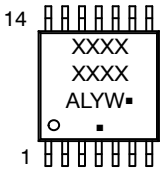

A = Assembly Location
L = Wafer Lot
Y = Year
W = Work Week
▪ = Pb−Free Package
(Note: Microdot may be in either location)

*This information is generic. Please refer to device data sheet for actual part marking. Pb−Free indicator, "G" or microdot "▪", may or may not be present. Some products may not follow the Generic Marking.

DOCUMENT NUMBER:	98ASH70246A	Electronic versions are uncontrolled except when accessed directly from the Document Repository. Printed versions are uncontrolled except when stamped "CONTROLLED COPY" in red.	
DESCRIPTION:	TSSOP−14 5.00x4.40x0.95, 0.65P		PAGE 1 OF 1

onsemi and onsemi are trademarks of Semiconductor Components Industries, LLC dba **onsemi** or its subsidiaries in the United States and/or other countries. **onsemi** reserves the right to make changes without further notice to any products herein. **onsemi** makes no warranty, representation or guarantee regarding the suitability of its products for any particular purpose, nor does **onsemi** assume any liability arising out of the application or use of any product or circuit, and specifically disclaims any and all liability, including without limitation special, consequential or incidental damages. **onsemi** does not convey any license under its patent rights nor the rights of others.

onsemi, onsemi, and other names, marks, and brands are registered and/or common law trademarks of Semiconductor Components Industries, LLC dba "**onsemi**" or its affiliates and/or subsidiaries in the United States and/or other countries. **onsemi** owns the rights to a number of patents, trademarks, copyrights, trade secrets, and other intellectual property. A listing of **onsemi**'s product/patent coverage may be accessed at www.onsemi.com/site/pdf/Patent−Marking.pdf. **onsemi** reserves the right to make changes at any time to any products or information herein, without notice. The information herein is provided "as−is" and **onsemi** makes no warranty, representation or guarantee regarding the accuracy of the information, product features, availability, functionality, or suitability of its products for any particular purpose, nor does **onsemi** assume any liability arising out of the application or use of any product or circuit, and specifically disclaims any and all liability, including without limitation special, consequential or incidental damages. Buyer is responsible for its products and applications using **onsemi** products, including compliance with all laws, regulations and safety requirements or standards, regardless of any support or applications information provided by **onsemi**. "Typical" parameters which may be provided in **onsemi** data sheets and/or specifications can and do vary in different applications and actual performance may vary over time. All operating parameters, including "Typicals" must be validated for each customer application by customer's technical experts. **onsemi** does not convey any license under any of its intellectual property rights nor the rights of others. **onsemi** products are not designed, intended, or authorized for use as a critical component in life support systems or any FDA Class 3 medical devices or medical devices with a same or similar classification in a foreign jurisdiction or any devices intended for implantation in the human body. Should Buyer purchase or use **onsemi** products for any such unintended or unauthorized application, Buyer shall indemnify and hold **onsemi** and its officers, employees, subsidiaries, affiliates, and distributors harmless against all claims, costs, damages, and expenses, and reasonable attorney fees arising out of, directly or indirectly, any claim of personal injury or death associated with such unintended or unauthorized use, even if such claim alleges that **onsemi** was negligent regarding the design or manufacture of the part. **onsemi** is an Equal Opportunity/Affirmative Action Employer. This literature is subject to all applicable copyright laws and is not for resale in any manner.

ADDITIONAL INFORMATION

TECHNICAL PUBLICATIONS:
Technical Library: www.onsemi.com/design/resources/technical−documentation
onsemi Website: www.onsemi.com

ONLINE SUPPORT: www.onsemi.com/support
For additional information, please contact your local Sales Representative at
www.onsemi.com/support/sales